شرکت فولاد کاوه اروند

پروژه احداث کارخانه۶۰۰ هزار تنی نورد میلگرد و مفتول

اسناد مناقصه خرید لوله، اتصالات و دیگر متعلقات (خط نورد-بخش مفتول)

شرکت مهندسی و مدیریت فن آوران سامیک

فهرست

دعوت نامه شرکت در مناقصه ۳

موافقتنامه قرارداد ۱۶

فرمهای مناقصه ۲۴

فهرست لوله ها ..... **Error! Bookmark not defined.**

فهرست اتصالات ..... **Error! Bookmark not defined.**

فهرست نگهدارنده لوله ها ..... **Error! Bookmark not defined.**

فهرست شیرها ..... **Error! Bookmark not defined.**

فهرست ابزارهای کنترلی ..... **Error! Bookmark not defined.**

فهرست پیچ ها و گسکت ها ..... **Error! Bookmark not defined.**

برنامه زمان بندی ۱۳

مشخصات فنی عمومی ۱۴

(نقشه ها) ۱۴

دعوت نامه شرکت در مناقصه

شرکت فولاد کاوه اروند در حال اجرای کارخانه ۶۰۰ هزار تنی نورد میلگرد و مفتول در بخشی از زمینی به مساحت تقریبی ۲۲۰ هکتار و در شهرک صنعتی خرمشهر واقع در استان خوزستان می باشد. این شرکت در نظر دارد "لوله، اتصالات و دیگر متعلقات خط نورد میلگرد و مفتول"کارخانه ۶۰۰ هزار تنی نورد میلگرد و مفتول، به شرح بیان شده و با شرط تحویل در محل خریدار را از طریق مناقصه به یکی از شرکت‌هایی که دارای امکانات کافی، منابع انسانی مناسب، سوابق و تجارب اجرایی مرتبط، کد اقتصادی و گواهی صلاحیت معتبر می‌باشند، واگذار نماید.

لذا بدینوسیله دعوت می شود با در نظر گرفتن مراتب زیر در مناقصه خرید شرکت نمایید.

۱- موضوع مناقصه :

خرید لوله، اتصالات، و دیگر متعلقات خط نورد میلگرد و مفتول _بخش مفتول)

۲- مبلغ انجام کار:

مبلغ انجام کارهای موضوع مناقصه بر اساس قیمت های پیشنهادی شرکت کنندگان در مناقصه می باشد.

۳- مدت اجرای کار:

مدت کل اجرای کار ..... ماه شمسی می باشد.

۴- کارفرما:

شرکت فولاد کاوه اروند.

۵- دستگاه نظارت:

شرکت مهندسی و مدیریت فن آوران سامیک.

۶- دستگاه مناقصه گزار:

شرکت فولاد کاوه اروند.

۷- مبلغ تضمین :

مبلغ تضمین شرکت در مناقصه به قرار زیر است:

سی صد و پنجاه میلیون (۳۵۰،۰۰۰،۰۰۰) ریال به صورت ضمانت‌نامه معتبر بانکی به نفع خریدار، مطابق نمونه ضمانت‌نامه مندرج در اسناد مناقصه.

مدت اعتبار تضمین‌های فوق باید حداقل ۹۰ روز پس از تاریخ افتتاح پیشنهادها بوده و برای ۹۰ روز دیگر قابل تمدید باشد و علاوه بر آن ضمانت‌نامه‌های معتبر بانکی باید طبق فرم‌های مورد قبول خریدار تنظیم شود.

۸- تحویل اسناد مناقصه:

اسناد مناقصه از روز یکشنبه مورخ ۹۹/۴۰/۳۰ در سایت شرکت به آدرس www. aks. co. ir در دسترس می باشد.

مهلت تسلیم پیشنهادها:

آخرین مهلت تسلیم پیشنهادها تا آخر وقت اداری روز دوشنبه مورخ ۹۹/۰۵/۰۶ می باشد.

نحوه تحویل پیشنهاد ها:

ارسال نسخه فیزیکی به آدرس خرمشهر، شهرک صنعتی منطقه آزاد اروند، شرکت فولاد کاوه اروند

مهر و امضاء اسناد:

تمام اسناد مناقصه، باید به مهر و امضاء مجاز و تعهدآور پیشنهاد دهنده برسد و همراه با پیشنهاد مناقصه به دستگاه مناقصه گزار تسلیم شود.

افتتاح پیشنهادها:

پیشنهاد های واصله در روز سه شنبه مورخ ۹۹/۰۵/۰۸ در کمیسیون مناقصه باز و خوانده می شود.

تعیین برنده مناقصه:

برندگان اول و دوم مناقصه بر اساس آیین نامه معاملات شرکت و قانون برگزاری مناقصات تعیین می‌شوند.

- پیشنهادات فنی پیشنهاد دهندگان می بایستی به صورت کامل، جامع و روشن باشد. **۱۷-** به پیشنهادهای فاقد امضاء، مبهم، مشروط، مخدوش و فاقد سپرده و پیشنهادهایی که بعد از انقضاء مدت مقرر واصل شود ترتیب اثر داده نخواهد شد.
- به پیشنهاد دهندگان توصیه می‌شود که کلیه اسناد، مدارک و اطلاعات فنی مورد نیاز مناقصه را به طور کامل و جامع در دو نسخه مهر و امضاء شده تحویل نمایند.
- در صورتی که برنده مناقصه حاضر به انعقاد قرارداد و انجام معامله نشود، تضمین شرکت در مناقصه او ضبط و با برنده دوم مناقصه معامله انجام می‌شود، تضمین برنده دوم نیز در صورتیکه از انجام معامله امتناع ورزد، ضبط خواهد شد.
- میزان تضمین انجام تعهدات، معادل پنج)۵(درصد جمع مبلغ قرارداد می‌باشد و برنده مناقصه می بایستی همزمان با امضاء قرارداد نسبت به ارائه آن به کار فرما اقدام و قرارداد را طبق نمونه ای که ضمیمه اسناد مناقصه می باشد، امضاء نماید.

* روش آزاد سازی ضمانت نامه های انجام تعهدات و سایر ضمانتنامه ها به شرح مندرج در اسناد مناقصه است. **۱-** رفتار فروشنده در پاسخ به دعوت نامه مشارکت در مناقصه و رعایت مهلت‌های مقرر، در دعوت از آنها برای شرکت در مناقصات آینده مؤثر خواهد بود.

- **قیمت‌های پیشنهادی:** قیمت‌های پیشنهادی می‌بایستی به صورت ریالی ارائه گردد و با برنده مناقصه قرارداد به صورت ریالی منعقد خواهد گردید.
- **مناقصه به صورت دو مرحله‌ای برگزار می‌شود.**

- حد نصاب شرکت کنندگان در مناقصه: تعداد پیشنهادکنندگان در این مناقصه، نباید کمتر از سه شرکت باشد. بدیهی است چنانچه شرکت‌کنندگان، کمتر از حد نصاب تعیین شده باشد مناقصه تجدید خواهد شد.

شرکت فولاد کاوه اروند

مهر و امضاء

دستورالعمل شرکت در مناقصه

فهرست مطالب

۱- موضوع مناقصه

۲- محل اجرای پروژه

۳-مدت انجام کار

۴- دستگاه نظارت

۵- تهیه پیشنهاد مناقصه

۶- اسناد مناقصه

۷- ارسال پیشنهادها

۸- گشایش پیشنهادها

۹- روش تهیه پیشنهادها

۱۰- وضع پیشنهاد و امضاء آن

۱۱- اعتبار پیشنهادها

۱۲- تضمین شرکت در مناقصه

۱۳- تضمین های دیگر

۱۴- تفسیر یا تصحیح اسناد و مدارک

۱۵- تجدید نظر در دعوت نامه و اسناد مناقصه

۱۶- نکات مهم در تعیین برنده مناقصه

۱۷- اعطای پیمان و فسخ آن

۱۸- مقادیر و انجام کار

۱۹- قیمت ها

۲۰- کسب اطلاعات و بازدید از محل کارگاه ها

۲۱- نقشه ها و مشخصات فنی

۲۲- تغییر مقادیر کار

۲۳- بیمه

۲۴- قوانین کار و بیمه تأمین اجتماعی

۲۵- جداول زمانی

۲۶- صلاحیت پیشنهاددهنده

۲۷- هزینه های پیشنهاد

۲۸- سازش به زیان دولت

۲۹- واگذاری کار

۳۰- اصلاحات و الحاقیه ها

۳۱- تشکیلات پیشنهادی پیمانکار جهت اجرای پیمان

۳۲- ماشین آلات و لوازم و تجهیزات پیشنهاد دهنده

مقدمه :

به کلیه پیشنهاد دهندگان توصیه می‌شود قبل از اقدام به تهیه پیشنهاد، مفاد این دستورالعمل و اسناد مناقصه را به دقت مطالعه نموده و پس از آن با آگاهی کامل نسبت به تهیه و ارائه پیشنهاد اقدام نمایند. بدیهی است پیشنهاد آن دسته از شرکت کنندگان در مناقصه که بدون رعایت مفاد این دستورالعمل و مندرجات سایر جلدهای اسناد مناقصه به طور ناقص یا مبهم تهیه و تحویل شود، ترتیب اثر داده نشده و مردود خواهد شد.

۱ . موضوع مناقصه:

عبارت است از "خرید لوله، اتصالات و دیگر متعلقات خط نورد میلگرد و مفتول-بخش مفتول" طبق نقشه‌ها و مشخصات فنی پیوست.

۲. اسناد مناقصه:

الف) شرایط مناقصه و دستورالعمل شرکت در مناقصه

ب) فرم پیمان

ج) فرم‌های مناقصه

د) مشخصات فنی مورد نظر خریدار و مهندس مشاور

ه) جدول زمانی تحویل به خریدار

و) لیست تامین کنندگان

۳ . روش تهیه پیشنهاد مناقصه:

۳-۱- پیشنهاد مناقصه باید به صورت چاپی یا با جوهر تهیه و تکمیل شود و با اسناد دیگری که در این دستورالعمل بیان می‌شود در لفاف واحد به نشانی تعیین شده در دعوت نامه مناقصه، تسلیم گردد.

۳-۲- در مواردی که در اسناد مناقصه لازم دانسته شده باشد مبالغ تعیین شده در پیشنهادها باید به حروف و ارقام مشخص گردند.

۳-۳- در صورت مشاهده اختلاف بین مبالغ تعیین شده به حروف و مبالغ تعیین شده به ارقام مبالغ تعیین شده به حروف معتبر خواهند بود.

۳-۴- در صورتیکه در متن پیشنهادها قلم خوردگی و یا تراشیدگی یا پاک‌شدگی وجود داشته باشد باید محل‌های مربوطه به امضاهای مجاز پیشنهاددهندگان برسد. در غیر این صورت پیشنهاد ناقص و مردود تلقی خواهد شد.

۳-۵- کلیه اطلاعات و مشخصاتی که باید به وسیله پیشنهاد دهنده تسلیم شود به زبان فارسی خواهد بود.

۳-۶- پیشنهادها باید طبق فرم‌ها، جداول و سایر اسناد مناقصه بدون هیچگونه تغییری تهیه شوند و باید صریح، بدون قید و ابهام و منضم به کلیه توضیحات و اسناد لازم باشند.

۳-۷- کلیه صفحات و اوراق اسناد مناقصه باید به امضاء مجاز شرکت یا موسسه پیشنهاد دهنده برسد و ممهور گردد.

۳-۸- هر پیشنهاد باید شامل نام، محل سکونت و محل اقامت قانونی شخص یا اشخاصی که پیشنهاد را تسلیم می‌نمایند باشد و باید به وسیله پیشنهاد دهنده با امضاء معمولی او امضاء و مهر شود.

۳-۹- پیشنهادهایی که بوسیله شرکت‌ها داده می‌شود باید متضمن اطلاعات کامل در مورد کلیه شرکا و نام کسانی که اختیار امضاء اسناد تعهد آور و قراردادها را دارند بوده و باید به وسیله صاحبان امضاء مجاز شرکت، امضاء و مهر شود و یا در صورتی که نماینده‌ای از طرف آنان اختیار امضاء داشته باشد وکالت‌نامه و اختیار نامه لازم و یک نسخه فتوکپی مصدق اساسنامه شرکت در این باره پیوست شده باشد.

۳-۱۰- امضای ذیل اسناد مناقصه بمنزله قبول کلیه مفاد آنها تلقی خواهد شد.

۳-۱۱- پیشنهاددهندگان باید کلیه اسناد و مدارک مناقصه را بدون تغییر یا حذف قسمتی از آنها ضمیمه پیشنهاد خود نموده و کلیه اوراق پیشنهادها و اسناد و مدارک مناقصه را به امضاء مجاز خود رسانده و به مهر شرکت ممهور نمایند. در صورتی که یک یا چند قسمت از اسناد مناقصه به امضاء پیشنهاد دهنده نرسیده باشد، تسلیم پیشنهاد به منزله قبول تمام شرایط اسناد مناقصه از طرف پیشنهاد دهنده تلقی خواهد شد. در صورتی که کل اسناد مناقصه فاقد امضاهای مجاز پیشنهاد دهنده باشد، مردود قلمداد خواهد شد و بدین ترتیب به پیشنهاد دهنده عودت خواهد شد.

۳-۱۲- اسنادی که وضع پیشنهاددهندگان را ارائه می‌نماید باید بصورت رسمی تنظیم شده و به همراه وکالت‌نامه و اسناد مربوطه دیگر که مشخص نماید چه اشخاصی مستقیماً مسئول اجرای صحیح قرارداد بوده و می‌توانند از طرف پیشنهاد دهنده رسیدها، قراردادها و اسناد تعهدآور دیگر را امضاء نمایند، باشد.

۳-۱۳- هر گونه انحراف یا استثناء نسبت به شرایط اسناد مناقصه باید به وضوح در فرم انحرافات و استثنائات نسبت به اسناد مناقصه لیست شود. بجز مواردی که در فرم مربوطه، به شرح فوق درج گردیده، در سایر موارد پیشنهادات از هر حیث مطابق با شرایط اسناد مناقصه تلقی خواهد شد.

۳-۱۴- یک نسخه از دو نسخه پیشنهادی که پیشنهاد دهنده به خریدار تسلیم می‌نماید اصلی و یک نسخه دیگر رونوشت خواهد بود. روی کلیه صفحات مربوط به پیشنهاد اصلی کلمه اصلی و روی کلیه صفحات مربوط به رونوشت پیشنهاد کلمه رونوشت نوشته شود.

۳-۱۵- طبق ماده دو بخشنامه شماره ۲۶۵۱۰/ت ۳۹۰۳۹ ک مورخ ۸۸/۲/۹ معاونت برنامه‌ریزی و نظارت راهبردی ریاست جمهوری انعقاد قرارداد مازاد بر مبلغ ۴,۴۰۰,۰۰۰,۰۰۰ ریال با شرکت‌هایی که فاقد صورت‌های مالی حسابرسی شده باشند، ممنوع می‌باشد، لذا پیشنهاد دهندگان می‌بایست صورت‌های مالی حسابرسی شده خود را ارائه نمایند و در غیر اینصورت انعقاد قرارداد با ایشان در صورت برنده شدن منوط به ارائه قرارداد حسابرسی آن شرکت با یک شرکت معتبر مورد تأیید جامعه حسابداران رسمی می‌باشد.

۳-۱۶- پیشنهاد مناقصه باید به ترتیب زیر در پاکت‌های سه گانه مذکور قرار داده شود:

الف) پاکت مربوط به ضمانت نامه بانکی شرکت در مناقصه: یک پاکت که با حرف "الف" مشخص می‌شود حاوی ضمانت‌نامه بانکی به شرح و مبلغ تعیین شده در آگهی مناقصه خواهد بود.

ب) پاکت مربوط به پیشنهاد فنی: پاکت دیگری که با حرف "ب" مشخص می‌گردد حاوی اسناد زیر خواهد بود:

- کلیه نقشه‌های مربوط به پیشنهاد و مشخصات فنی، منجمله الحاقیه‌های فنی در صورتیکه به وسیله مهندس مشاور صادر شده باشد.
- اظهاریه پیشنهاد دهنده، تصویر اساسنامه، آگهی تأسیس و آخرین آگهی تغییرات شرکت پیشنهاد دهنده، گزارشی از وضع مالی، کارهای انجام داده و در دست اجرا با ذکر، نوع کار، حجم ریالی کارها، پیشرفت کار و طرف قراردادها به تفصیل
- جدول زمانی تحویل کالا به ترتیب مورد نظر خریدار که توسط فروشنده تکمیل شده است.

ج) پاکت "ج" مربوط به پیشنهاد مالی

پاکت دیگری که با "ج" مشخص می‌شود محتوی پیشنهاد قیمت و جداول مقادیر و قیمت‌ها خواهد بود.

محتویات پاکت "ج" قیمت بایستی فاقد هر گونه شرط باشد. چنانچه پیشنهاد قیمت به هر گونه شرطی منوط شده باشد پیشنهاد قیمت مشروط قلمداد شده و موجب ابطال آن خواهد شد. پیشنهاد قیمت بایستی خوانا باشد چنانچه پیشنهاد قیمت از نظر رقم خوانا و قابل تشخیص نباشد پیشنهاد مردود اعلام خواهد شد.

۳-۱۷- هر یک از سه پاکت الف و ب و ج باید لاک و مهر شده جمعاً در لفاف یا پاکت لاک و مهر شده دیگری گذارده شده و روی هر یک از سه پاکت مذکور و لفاف آنها نام و نشانی شرکت کننده مناقصه و موضوع به وضوح نوشته شده باشد.

۴- ارسال پیشنهادها:

۴-۱- پاکت در بسته محتوی پیشنهاد باید به نشانی تعیین شده در دعوتنامه مناقصه تسلیم گردد.

۴-۲- در مقابل تسلیم پاکت‌های محتوی پیشنهاد باید رسید با قید کامل ساعت و تاریخ تحویل مطالبه و اخذ گردد.

۵- گشایش پیشنهادها:

پاکتهای محتوی پیشنهادها در ساعت و تاریخی که در آگهی مناقصه ذکر گردیده است به ترتیب زیر یکی پس از دیگری بوسیله کمیسیون مناقصه باز خواهند شد .

الف) ابتدا پاکت "الف" باز خواهد شد . هر گاه محتوای این پاکت به ترتیب تعیین شده دربند ۳-۱۶-الف فوق الذکر و شرایط دیگر این دستور العمل نباشد پیشنهاد مردود تلقی و نسبت به بازگشایی پاکتهای دیگر اقدامی بعمل نخواهد آمد و عینا" به پیشنهاددهنده مسترد خواهد شد .

ب) هر گاه محتوی پاکت "الف" به شرحی که در بالا بیان شد، باشد پاکت "ب" باز خواهد شد و محتوای آن بررسی خواهد گردید. هیچ گونه صورت قیمتی نباید در پاکت "ب" گذاشته شود.

پاکت "ب" باید کامل و منطبق با شرایط مندرج در بند ۳-۱۶-ب باشد در غیر اینصورت پیشنهاد رد می شود.

ج) هر گاه محتوی پاکت "ب" به شرحی که قبلا" بیان شد مورد تایید باشد کمیسیون فنی نسبت به بازگشایی پاکت های "ج" اقدام خواهد نمود. پاکتهای "ج" پیشنهادهایی که مورد قبول کمیسیون فنی واقع نشده‌اند عینا" به پیشنهاد دهندگان مسترد خواهد شد و سپس نسبت به افتتاح پاکتهای "ج" پیشنهاد دهندگانی که پیشنهاد آنان مورد قبول واقع شده است اقدام بعمل خواهد آمد .

۶ . اعتبار پیشنهادها:

پیشنهادها از هر حیث برای مدت نود (۹۰) روز بعد از تاریخ تعیین شده برای تسلیم پیشنهادها معتبر می‌باشد.

۷ .تضمین شرکت در مناقصه:

۷-۱- طبق مفاد شرایط مناقصه، با هر پیشنهاد باید تضمین شرکت در مناقصه بصورت ضمانت نامه بانکی پیوست باشد و تضمین شرکت در مناقصه حداقل بایستی برای مدت نود (۹۰) روز از تاریخ تسلیم پیشنهادها معتبر بوده و بوسیله خریدار با هزینه و همکاری پیشنهاد دهنده برای نود (۹۰) روز دیگر نیز قابل تمدید باشد.

۷-۲- تضمین شرکت در مناقصه به منظور حصول اطمینان از حسن اجرای مفاد پیشنهاد شرکت در مناقصه و اجرای پیشنهاد مناقصه است که بوسیله پیشنهاد دهنده درمورد امضاء قرارداد تعهد شده است.

تضمین شرکت در مناقصه برای مدت اعتبار پیشنهادها بوسیله فروشنده نگهداری خواهد شد و در صورت امتناع پیشنهاد دهنده از امضاء قرارداد یا سپردن ضمانت نامه انجام تعهدات، این تضمین بوسیله خریدار ضبط خواهد شد و پیشنهاد دهنده حق هیچ گونه ادعایی در این زمینه را نخواهد داشت.

۷-۳- ضمانت نامه شرکت در مناقصه پیشنهاد دهندگانی که پیشنهاد آنان در مرتبه دوم قرار می‌گیرد نیز تا امضاء قرارداد نگهداری خواهد شد و پس از آن ضمانت نامه شرکت در مناقصه شرکت کنندگان مذکور آزاد می‌گردد.

۸. اعطای پیمان و فسخ آن:

خریدار حق اعطای پیمان به هر پیشنهاد دهنده‌ای که پیشنهاد او را بیشتر با اهداف خود منطبق می‌یابد را دارد. در صورتی که برنده اول مناقصه از قبول کار خودداری کند، وجه الضمان شرکت در مناقصه وی به نفع خریدار ضبط و نامبرده وظیفه و مسئولیت دیگری در قبال خریدار نخواهد داشت.

بعد از فسخ پیمان با پیشنهاد دهنده اول و تصدیق مراتب توسط وی، خریدار مجاز به اعطای پیمان به هر پیشنهاد دهنده دیگری می‌باشد.

در هر صورت برنده مناقصه باید ظرف مدت حداکثر پانزده (۱۵) روز پس از اعلام خریدار، قرارداد را طبق نمونه‌ای که پیوست اسناد مناقصه است امضاء نماید. ضمانت نامه شرکت در مناقصه تا تاریخ امضاء قرارداد و تسلیم ضمانت نامهٔ انجام تعهدات توسط خریدار نگهداری می‌شود و در صورت لزوم به هزینهٔ برندهٔ مناقصه تمدید خواهد شد. امتناع فروشنده یا تأخیر غیر موجه او در امضاء قرارداد یا تسلیم ضمانت نامهٔ انجام تعهدات به خریدار حق می‌دهد که وجوه مربوطه به ضمانت نامه شرکت در مناقصه را به نفع خود ضبط نماید. در چنین شرایطی مراتب به ترتیب به پیشنهاد دهنده حائز دومین حداقل ابلاغ می‌گردد.

چنانچه این پیشنهاد دهنده نیز نتواند به تعهدات خود عمل نمایند، ضمانت نامه یا سپرده شرکت در مناقصه آنها عیناً به شرح بالا توسط خریدار ضبط خواهد گردید.

۹. قیمت‌ها :

۹- ۱- قیمت‌های پیشنهادی باید به ترتیب مندرج در ماده ۳ این دستورالعمل مشخص شوند.

۹-۲- پیشنهاد دهندگان قیمت پیشنهادی خود را به ریال تعیین خواهند کرد.

۹-۳- قیمت‌های پیشنهادی می‌بایست بدون مالیات بر ارزش افزوده محاسبه و ارائه گردد.

۱۰. نقشه‌ها و مشخصات فنی:

۱۰-۱- نقشه ها و مشخصات فنی و احجام نهایی در مرحله قرارداد در اختیار فروشنده قرار خواهد گرفت.

۱۰-۲- در مواردی که لازم باشد حداقل و حداکثر مشخصات فنی و یا اطلاعات مربوط به استانداردها که مورد نظر خریدار است در مشخصات فنی کلی تعیین خواهد شد.

۱۰-۳- اطلاعات مذکور و هرگونه اطلاع دیگری که در اسناد مناقصه تهیه شده است، پیشنهاد دهنده را از مسئولیت دقت و مطالعه مبرا نمی‌سازد و پیشنهاد دهنده باید راساً از کامل بودن پیشنهاد جهت انجام کارهای موضوع پیمان اطمینان حاصل کند.

۱۱. قوانین کار و بیمه تأمین اجتماعی:

فروشنده تأیید می‌نماید که از جمیع قوانین و مقررات مربوط به کار، بیمه های تأمین اجتماعی، حفاظت فنی و همچنین قوانین مربوط به مالیات‌ها و عوارض کاملاً مطلع است. پرداخت کلیه مالیات‌ها، حقوق، عوارض بیمه‌های تأمین اجتماعی وغیره (به استثنای مالیات بر ارزش افزوده، که بعهده خریدار می‌باشد) از هرنوع و از هر قبیل که به موجب قوانین و مقررات تعلق می‌گیرد، بعهده فروشنده می‌باشد.

مبالغی از این مالیات‌ها و عوارضی که طبق قوانین و مقررات باید از طریق خریدار وصول گردد، از پرداخت‌های فروشنده کسر و به حساب‌های مذکور واریز خواهد شد.

۱۲.جداول زمانی:

پیشنهاددهنده، جداول زمان‌بندی اجرای کارهای موضوع پیمان را باید به همراه پیشنهاد خود درسه نسخه تسلیم نماید. درجداول زمان‌بندی باید تاریخ شروع هر بخش از کار و تاریخ خاتمه آن دقیقاً معین شود.

۱۳. صلاحیت پیشنهاد دهنده:

پیشنهاد دهنده بایستی جهت اجرای کارها مطابق مشخصات و برنامه زمان بندی پیش بینی شده دارای امکانات و نیروی انسانی و توان مالی کافی و قانع کننده‌ای باشد.

۱۴. هزینه‌های پیشنهاد:

خریدار هیچ گونه هزینه‌ای ر ا که پیشنهاد دهنده برای تهیه پیشنهاد متحمل شده است، به او باز پرداخت نخواهد کرد.

۱۵. سازش به زیان مناقصه گزار:

هرگاه درمناقصه‌ای وقوف حاصل شود که پیشنهاد دهندگانی به زیان مناقصه‌گزار سازش کرده‌اند و مراتب به خریدار گزارش شود و چنانچه به تشخیص خریدار این امر صورت گرفته باشد، مناقصه ابطال خواهد شد و خریدار گزارش امر را با ذکر نام پیشنهاد دهندگانی که در این جریان شرکت داشته‌اند به معاونت برنامه‌ریزی و نظارت راهبردی ریاست جمهوری ارسال خواهد نمود. معاونت برنامه‌ریزی و نظارت راهبردی ریاست جمهوری طبق گزارش واصله، میزان تنبیه پیشنهاد دهندگان متخلف را ازطریق حذف موقت نام آنها از فهرست‌ها، از یک تا دو سال تعیین و مراتب را در فهرست‌ها منعکس و کتباً به پیشنهاددهندگان متخلف و دستگاه‌های اجرایی اعلام خواهد نمود.

۱۶. واگذاری کار:

شرکت کننده پس از برنده شدن در مناقصه و وصول دستور خریدار دائر بر عقد قرارداد، حق انتقال تعهدات ناشی از معامله را بدون موافقت قبلی وکتبی خریدار به شخص یا اشخاص حقوقی یا حقیقی دیگر ندارد و درصورت عدم رعایت مفاد این ماده، ضمانت نامه شرکت در مناقصه وی به نفع خریدار ضبط خواهد گردید و همچنین در صورتی که پس از عقد قرارداد و قبل از تحویل موقت کار وقوف حاصل شود که فروشنده تمام یا قسمت عمده عملیات موضوع قرار داد خود را بدون داشتن مجوز به شخص حقیقی یا حقوقی دیگری واگذار کرده است و چنانچه با تحقیقات لازم موضوع محرز شود به دستور خریدار از فروشنده خلع ید می‌گردد. نام چنین فروشنده ای جهت اطلاع و تنبیهات لازم، به مراجع ذیربط اعلام خواهد گردید.

موافقتنامه قرارداد

بسمه تعالی

ماده ۱ ــ موضوع قرارداد

عبارت است از "خرید لوله ، اتصالات و دیگر متعلقات مربوط به لوله کشی خط نورد میلگرد و مفتول" شرکت فولاد کاوه اروند واقع در منطقه خوزستان، خرمشهر، شهرک صنعتی خرمشهر مطابق با برنامه زمان‌بندی و به شرح مشخصات فنی که شامل اسناد و نقشه‌های پیوست می‌باشد.

ماده ۲- اسناد و مدارک قرارداد

این پیمان شامل اسناد مدارک زیر است:

ا الف(موافقتنامه

ب(شرایط عمومی

ج(شرایط خصوصی

د(برنامه زمانی کلی

ه(مشخصات کلی پروژه

و(جداول مقادیر کار و قیمتها

ر) اسناد تکمیلی که حین اجرای کار و به منظور اجرای پیمان، به پیمانکار ابلاغ می‌شود یا بین طرفین پیمان مبادله می‌گردد نیز جزء اسناد و مدارک پیمان به شمار می‌آید. این اسناد باید در چارچوب اسناد و مدارک پیمان تهیه شود. این اسناد ممکن است به صورت مشخصات فنی، نقشه، دستور کار و صورت مجلس باشد.

در صورت وجود دوگانگی بین اسناد و مدارک پیمان، موافقت نامه پیمان بر دیگر اسناد و مدارک پیمان اولویت دارد.

شرایط عمومی پیمان براساس نشریه شماره ۴۳۱۱ بخشنامه شماره ۱۰۲/۱۰۸۸-۵۴/۸۴۲ مورخ ۷۸/۳/۳ سازمان مدیریت و برنامه‌ریزی کشور در این قرارداد کاربرد دارد.

ماده ۳- مدت قرارداد

مدت این پیمان ..... ماه شمسی است. این مدت با توافق طرفین قابل تغییر است.

ماده ۴- تاریخ تنفیذ، مدت، تاریخ شروع کار

الف) این پیمان از تاریخ مبادله آن (ابلاغ از سوی کارفرما) نافذ است.

ب) تاریخ شروع کار، تاریخ تنفیذ قرارداد است و پیمانکار متعهد است از تاریخ تعیین شده برای شروع کار، در مدت ده (۱۰) روز نسبت به تجهیز کارگاه به منظور شروع عملیات موضوع پیمان اقدام نماید.

ماده ۵- مبلغ قرارداد:

مبلغ قرارداد برای انجام کلیه فعالیت‌های موضوع قرارداد به حروف ریال و به عدد ریال است.

تبصره ۱: کلیه قیمت‌های واحد مندرج در قرارداد ثابت و قطعی خواهد بود و هیچگونه تعدیل بدان تعلق نخواهد گرفت.

تبصره ۲: قیمت و مبلغ قرارداد بدون احتساب مالیات بر ارزش افزوده بوده و هزینه‌های ناشی از اجرای قانون توسط فروشنده در صورت وضعیت‌ها لحاظ خواهد شد. خریدار تنها وجه مربوط به مالیات بر ارزش افزوده را پرداخت خواهد نمود.

ماده ۶-تضمین انجام تعهدات و حسن انجام کار :

۶-۱- فروشنده موظف است همزمان با امضاء قرارداد یک فقره ضمانت نامه بانکی به میزان ۵ درصد کل مبلغ تقریبی قرارداد به خریدار تسلیم نماید. ضمانت نامه مذکور بعد از انجام کامل تعهدات فروشنده و امضاء صورت جلسه تحویل موقت آزاد می‌گردد.

۶-۲- ده درصد از کل مبلغ قرارداد بعنوان تضمین حسن انجام کار از هر پرداخت کسر می‌شود که پس از پایان دورهٔ ضمانت و اطمینان از صحت کالای موضوع قرارداد به فروشنده پرداخت خواهد شد.

ماده ۷- نحوه پرداخت مبلغ قرارداد:

بیست و پنج درصد از کل مبلغ قرارداد بعنوان پیش پرداخت در ازاء ضمانت نامه بانکی پرداخت می شود. جدول تفکیکی قیمت‌ها که مورد تأیید خریدار قرار گرفته، مبنای پرداخت‌های میانی است. پس از تکمیل نهایی هر مجموعه از موضوع قرارداد و تحویل آن به دستگاه نظارت، مبلغ آن مجموعه، مطابق با جدول مذکور، با کسر کسورات قانونی قرارداد و ۱۰ ٪ حسن انجام کار به فروشنده پرداخت می‌گردد. تأیید صورت وضعیت‌ها منوط به رعایت اولویت‌ها مطابق با برنامه زمان‌بندی است.

تبصره: تضمین حسن انجام کار به میزان ۱۰٪ مبلغ کل قرارداد، پس از سپری شدن دوره تضمین در صورت صحت و سلامت موضوع قرارداد و اجرای تعهدات گارانتی از سوی فروشنده، توسط خریدار پرداخت می‌گردد.

ماده ۸ - کسورات قانونی:

کلیه کسورات قانونی از جمله مالیات بعهده و هزینهٔ فروشنده می‌باشد که مبلغ آن از هر صورت وضعیت فروشنده کسر و پس از ارائهٔ مفاصا حساب به فروشنده مسترد خواهد شد.

ماده ۹: دوره تضمین :

دوره تضمین ۱۲ ماه بعد از راه اندازی خط نورد یا ۲۴ ماه بعد از تحویل موقت کل موضوع قرارداد، هرکدام زودتر باشد، می‌باشد.

تبصره ۳: فروشنده تضمین می‌نماید که لوله‌ها، اتصالات و دیگر متعلقات از هر لحاظ بر طبق مشخصات مشروحه در اسناد و مدارک قرارداد بوده و خریدار قادر به بهره‌برداری مطمئن از آن می‌باشد.

تبصره ۴: چنانچه در دوره تضمین معایب و نقایصی در موضوع قرارداد مشاهده شود که ناشی از عدم رعایت مشخصات فنی یا اشتباه در اجرای نقشه‌ها، اطلاعات و دستورالعمل‌های تحویلی باشد فروشنده مکلف است به هزینه خود سریعاً موارد را جایگزین نماید در صورت عدم رفع نقایص حداکثر ظرف مدت ۵ روز از طرف فروشنده، خریدار راساً اقدام به رفع نقایص نموده وهزینه‌های مربوطه را به تشخیص خود بعلاوه ۱۵ درصد هزینه بالاسری از محل مطالبات یا تضامین فروشنده برداشت خواهد نمود.

ماده ۱۰ - تعهدات فروشنده:

۱۰-۱- فروشنده اظهار می‌دارد و متعهد است که از توانایی فنی و مالی و پرسنلی لازم وکافی برای اجرای تعهدات قرارداد برخوردار می‌باشد.

۱۰-۲- فروشنده متعهد می‌گردد که اقلام موضوع قرارداد را از لیست سازندگان مورد تایید که ضمیمه قرارداد است تامین کند و اقلام موضوع قرارداد را در زمان تعیین شده و طبق نظر خریدار تحویل نماید.

۱۰-۳- فروشنده اذعان می‌دارد با اطلاع از حجم کار وکیفیت کار وکلیه تعهدات در این قرارداد اقدام بـه امضـاء آن نمـوده و تعهـدات قراردادی خود را مطابق با استاندارد مورد توافق ایفاء می‌نماید.

۱۰-۴- فروشنده می‌پذیرد که دستگاه نظارت خریدار تعیین کننده میزان و مقدار کار انجام شده طبق موضوع سفارش باشد. بدیهی است تنها کار تائید شده از سوی نمایندۀ دستگاه نظارت خریدار در ارتباط با اجرای کار موضوع قرارداد معتبر و قابل پذیرش خواهد بود.

۱۰-۵- نظارت بر اجرای کار بعهده خریدار و یا نمایندگان او می‌باشد و فروشنده موظف است بر طبق مفاد قرارداد و اسناد و مدارک و دستورالعمل‌های خریدار عمل نموده و ضمن همکاری با خریدار، امکانات لازم جهت هرگونه نظارت و بازرسی را نیز فراهم نماید. نظر خریدار و یا نمایندگان ایشان نافی مسئولیت فروشنده در اجرای صحیح کار نمی‌باشد.

۱۰-۶- فروشنده موظف به ارائه برنامه زمانبندی کلی (دربرگیرنده کلیه اقلام موضوع قرارداد)، می‌باشد که پس از بررسی و تأیید خریدار جهت اجرا به فروشنده ابلاغ خواهد شد.

۱۰-۷- فروشنده بدون اخذ مجوز کتبی خریدار حق واگذاری جزء یا کل قرارداد به غیر را ندارد.

۱۰-۸- فروشنده می‌بایست پیش بینی تنخواه مناسب جهت جلوگیری از عدم نقدینگی در اجرای پروژه را حداقل به میزان ٪۲۰ (بیست درصد) مبلغ قرارداد در نظر بگیرد.

۱۰-۹- فروشنده موظف است، برای هر محموله مواد اولیه خریداری شده، اسناد معتبر که نشانگر اصل بودن، مشخصات فنی و کیفیت مواد خرید شده باشد را ارائه کند. در صورت اعلام نیاز از طرف دستگاه نظارت برای انجام تست‌های لازم بر روی مواد اولیه و محصول، نظیر آنالیز شیمیایی، تست پوشش گالوانیزه و تست‌های مکانیکی مطابق با استانداردهای مربوطه، هزینۀ این تست‌ها به عهده فروشنده است.

۱۰-۱۰- چنانچه پس از شروع بکار یا در حین اجرای عملیات، خرید یا اجراء، خریدار به این نتیجه برسد که فروشنده توانایی مالی و یا فنی ادامه کار را ندارد (از جمله اشکالات کمی یا کیفی در کار به تشخیص دستگاه نظارت خریدار)، فروشنده می‌پذیرد که خریدار مجاز خواهد بود در هر مرحله‌ای از انجام کار موضوع قرارداد، قرارداد را بطور یک طرفه فسخ نماید و فروشنده حق هر گونه اعتراضی را از خود سلب نمود و خریدار مجاز خواهد بود خسارت وارده به خود را اعم از تأخیرات اجراء پروژه و صدمات احتمالی به تجهیزات را از تضامین فروشنده برداشت نماید.

۱۰-۱۱- چنانچه دستگاه نظارت خریدار در هنگام انجام عملیات موضوع قرارداد در نحوه عملکرد یا روش انجام کار اشکال یا اشکالاتی را ببیند، فروشنده می‌بایست سریعاً بدون هیچگونه اعتراض و نیز دریافت وجه اضافی نسبت به رفع عیب اقدام نماید.

ماده ۱۱- تعهدات کارفرما

۱۱-۱- کارفرما متعهد است به تناسب پیشرفت کار، نقشه‌ها، اطلاعات و مدارک مورد نیاز پیمانکار (از قبیل نقشه‌های تفصیلی و فنی تائید شده، استانداردهای مورد نیاز، مدارک نهایی تائید شده، زیرساخت و شرایط محیطی) را ابلاغ نماید.

۱۱-۲- هزینه انجام آزمایشات زیر به هزینه کارفرما (و بر عهده پیمانکار) می‌باشد:

- هرگونه آزمایش تأیید مصالح که توسط نمایندگان کارفرما ضروری تشخیص داده شود.
- هرگونه آزمایش کیفیت جوش که توسط نمایندگان کارفرما ضروری تشخیص داده شود.

لازم به توضیح است که در صورتی که نتیجه آزمایش مؤید عدم کیفیت باشد، پرداخت هزینه آزمایش بعهده پیمانکار می باشد، در غیر اینصورت هزینه‌های آزمایشات بعهده کارفرما می باشد.

ماده ۱۲- حفاظت از اطلاعات

شرکت پیمانکار پس از انجام قرارداد و در طول اجرای آن به عنوان امین شرکت فولاد کاوه اروند محسوب شده و هرگونه استفاده و بهره برداری از اطلاعات (دیجیتالی و غیر دیجیتالی) خارج از حوزه قرارداد و یا واگذاری آن به اشخاص ثالث و نگهداری آن در شرکت پیمانکار تخلف تلقی شده و با خاطی برابر مقررات رفتار خواهد شد.

ماده ۱۳- دستگاه نظارت:

دستگاه نظارت شرکت مهندسی و مدیریت فن آوران سامیک می‌باشد و فروشنده موظف است کارها را بر طبق قرارداد و اصول فنی و مطابق نظر دستگاه نظارت در حدود مشخصات اسناد و مدارک قرارداد و پیوست‌های آن اجرا نماید.

ماده ۱۴- تغییر در مقدار کارها:

خریدار می‌تواند حداکثر در طول شش ماه پس از نفوذ قرارداد با ابلاغ کتبی به پیمانکار معادل سی و پنج (۳۵٪) درصد مبلغ قرارداد، کارهای موضوع قرارداد را افزایش و یا در طول سه ماه پس از نفوذ قرارداد، حداکثر به همین میزان کاهش دهد، بدون آنکه در بهای واحد کارهای موضوع قرارداد تغییری حاصل شود. افزایش و یا کاهش مبلغ قرارداد به میزان ۳۵ درصد به یکی از اقلام و یا تعدادی از اقلام قراردادی می‌تواند تعلق گیرد.

چنانچه خریدار قصد خود را در خصوص افزایش و یا کاهش کارها تا میزان ۳۵ درصد به پیمانکار اطلاع داده و پیمانکار از قبول آن سرباز زند، ضمانتنامه حسن انجام تعهدات وی بدون هیچگونه تشریفات قضائی به نفع خریدار ضبط خواهد شد.

۱۴-۱- در صورتی که خریدار به مقدار کارهای موضوع قرارداد اضافه و یا از آن کسر نماید در این صورت میزان پیش‌پرداخت و مبلغ قرارداد متناسباً کاهش و یا افزایش خواهد یافت.

۱۴-۲-در صورتی که خریدار به میزان کارهای موضوع قرارداد اضافه نماید پیمانکار متعهد است حداکثر ظرف مدت ۱۰ (ده) روز از تاریخ ابلاغ خریدار ضمانتنامه‌ای به میزان ۱۰٪ (ده) درصد مبلغ کارهای اضافه شده و سایر هزینه‌های مربوطه در تکمیل ضمانتنامه قبلی بابت حسن انجام تعهدات تسلیم خریدار نماید، خریدار نیز تعهد می نماید در صورت کاهش دادن مقادیر کارها، معادل ۱۰٪ (ده) درصد مبلغ کارهای کاهش داده شده و سایر هزینه‌های مربوطه را از محل ضمانتنامه دریافتی آزاد نماید.

ماده ۱۵- تأخیرات قرارداد:

به ازای هر روز تأخیر ناشی از عملکرد فروشنده در اجرای برنامه، به میزان یک درصد مبلغ باقیمانده قرارداد بعنوان جریمه تأخیر از پرداخت‌های فروشنده کسر می‌شود و تأخیر بیش از ده روز علاوه بر اعمال کسورات مذکور موجب حق فسخ قرارداد برای خریدار می‌باشد. جریمهٔ تأخیر از پرداخت‌های به فروشنده کسر خواهد شد و در صورت عدم تأمین از این محل از سایر مطالبات و تضامین فروشنده برداشت می‌گردد.

ماده ۱۶- تعدیل :

به این قرارداد هیچگونه تعدیلی تعلق نمی‌گیرد.

ماده ۱۷- فسخ قرارداد:

در صورت عدم اجرای صحیح وکامل هریک از موارد، ضمائم و متعلقات این قرارداد از جانب فروشنده در مهلت تعیین شده، خریدار حق دارد قرارداد را یک جانبه فسخ و خسارت ناشی از فسخ قرارداد را از مطالبات فروشنده برداشت و یا ترتیب وصول آن را بدهد.

ماده ۱۸- فورس ماژور:

در صورت بروز شرایط و حوادث غیر مترقبه خارج از اراده آزاد طرفین، لازم است مدعی مراتب را کتباً به طرف مقابل اعلام کند. سپس تصمیمات متخذه در جلسه مشترک ملاک عمل خواهد بود.

ماده ۱۹- چگونگی حل اختلاف:

موارد مورد اختلاف در کمیسیونی متشکل از نمایندگان خریدار و فروشنده و نماینده مرضی الطرفین مطرح خواهد شد و در صورت عدم حصول نتیجه در کمیسیون موضوع طبق قوانین جمهوری اسلامی ایران به دادگاه صالحه در ایران ارجاع خواهد شد.

ماده۲۰ ـ نشانی دو طرف:

نشانی کارفرما: خرمشهر- منطقه آزاد اروند- جاده امام صادق- شهرک صنعتی- تلفن ۹-۵۳۵۴۶۴۶۰-۰۶۱و فاکس ۰۶۱۵۳۵۴۶۴۵۹

نشانی پیمانکار: .....

هر گاه یکی از طرفین قرارداد؛ نشانی خود را در مدت قرارداد تغییر دهد باید موضوع را کتباً به طرف دیگر اطلاع دهد و تا وقتی که نشانی جدید به طرف دیگر ابلاغ نشده است، کلیه نامه هایی که به نشانی مذکور در قرارداد ارسال گردیده، ابلاغ شده تلقی می گردد.

ماده ۲۱- نسخ قرارداد:

این قرارداد در **۲۱** ماده، ۴ تبصره و سه نسخه که هر یک حکم واحد را دارد، تهیه و به امضای طرفین قرارداد رسیده است و مفاد آن پس از امضاء طرفین لازم الاجرا می‌باشد.

امضاء کارفرما / شرکت فولادکاوه اروند

امضاء پیمانکار /

شرایط عمومی پیمان

براساس نشریه شماره ۴۳۱۱

بخشنامه شماره ۵۴/۸۴۲-۱۰۲/۱۰۸۸ مورخ ۷۸/۳/۳ سازمان مدیریت و برنامه‌ریزی کشور

در این قرارداد کاربرد دارد

فرم‌های مناقصه

فهرست

۱-۱- فرم ضمانت نامه شرکت در مناقصه

۱-۲- فرم ضمانت نامه پیش پرداخت

۱-۳ -فرم ضمانت نامه انجام تعهدات

۱-۴- فرم ضمانت نامه استرداد کسور حسن انجام کار

۱-۵- فرم پیشنهاد قیمت

ضمانت نامه شرکت در مناقصه

(نمونه یک)

نظر به اینکه * به نشانی:

مایل است در مناقصه **** شرکت نماید این **

از * در مقابل ** برای

مبلغ ریال تضمین تعهد می‌نماید چنانچه ***

به این ** اطلاع دهد که پیشنهاد شرکت‌کنندهٔ نامبرده مورد قبول واقع شده و مشار الیه از امضای پیمان مربوط یا تسلیم ضمانت نامه انجام تعهدات پیمان استنکاف نموده است، تا میزان

ریال هر مبلغی را که *** مطالبه نماید، به محض دریافت اولین تقاضای کتبی واصله از سوی ***

بدون اینکه احتیاجی به اثبات استنکاف یا اقامه دلیل و یا صدور اظهارنامه یا اقدامی از مجاری قانونی یا قضائی داشته باشد، بی‌درنگ در وجه یا حواله کرد *** بپردازد.

مدت اعتبار این ضمانت نامه سه ماه است و تا آخر ساعت اداری روز معتبر می‌باشد.

این مدت بنا به درخواست کتبی *** برای حداکثر سه ماه دیگر قابل تمدید است و در صورتیکه ** نتواند یا نخواهد مدت این ضمانت نامه را تمدید کند و یا *

موجب این تمدید را فراهم نسازد و * را موافق با تمدید ننماید، **

متعهد است بدون اینکه احتیاجی به مطالبه مجدد باشد، مبلغ درج شده در این ضمانت نامه را در وجه یا حواله کرد ** پرداخت کند.

چنانچه مبلغ این ضمانت نامه در مدت مقرر از سوی *** مطالبه نشود، ضمانت نامه در سررسید، خود به خود باطل و از درجه اعتبار ساقط است، اعم از اینکه مسترد گردد یا مسترد نگردد.

* عنوان فروشنده

** عنوان بانک یا مؤسسات اعتباری غیر بانکی دارای مجوز

*** عنوان دستگاه اجرائی کارفرما

**** موضوع قرارداد مورد نظر

ضمانت نامه پیش پرداخت

(نمونه دو)

نظر به اینکه * به نشانی:

به این** اطلاع داده است قرارداد ****

را با *** منعقد نموده است و قرارداد مبلغ

این *** متعهد است در صورتی که *** کتباً به این بانک اطلاع دهد که خواستار بازپرداخت مبلغ پیش پرداخت داده شده به * است. هر مبلغی تا میزان مانده از مبلغ پیش پرداخت را به محض دریافت اولین تقاضای کتبی واصله از ***

بدون اینکه احتیاجی به صدور اظهارنامه یا اقدامی از مجاری قانونی و قضائی داشته باشد، بی‌درنگ در وجه یا حواله کرد *** بپردازد.

اعتبار این ضمانت‌نامه تا آخر وقت اداری روز است و بنا به در خواست کتبی ***

واصله تا قبل از پایان وقت اداری روز تعیین شده، برای مدتی که درخواست شود قابل تمدید می‌باشد و در صورتی که ** نتواند یا نخواهد مدت این ضمانت نامه را تمدید کند و یا * موجب این تمدید را فراهم نسازد و نتواند ** را حاضر به تمدید نماید ** متعهد است بدون آنکه احتیاجی به مطالبه مجدد باشد، مبلغ درج شده در بالا را در وجه یا حواله کرد *** پرداخت کند.

مبلغ این ضمانت نامه بنا به درخواست کتبی * که در آن مبلغ پیش پرداخت واریز شده درج شده است، طبق نظر کتبی *** که باید حداکثر ظرف سی روز از تاریخ تحویل نامه استعلام ** به *** در مورد مبلغ پیش پرداخت واریز شده واصل گردد، تقلیل داده می‌شود و در صورت عدم وصول پاسخی از سوی *** ضمانت نامه معادل مبلغی که * اعلام نموده است، تقلیل داده خواهد شد.

در صورتی که تمام مبلغ این پیش‌پرداخت به ترتیب تعیین شده در این ضمانت نامه واریز گردد و مبلغ آن به صفر تقلیل داده شود، این ضمانت نامه خود به خود باطل و از درجه اعتبار ساقط است، اعم از اینکه اصل به بانک مسترد گردد تا مسترد نگردد.

* عنوان فروشنده

** عنوان بانک یا مؤسسات اعتباری غیر بانکی دارای مجوز

*** عنوان دستگاه اجرائی یا کارفرما

**** موضوع قرارداد مورد نظر

ضمانت نامه انجام تعهدات

(نمونه سه)

نظر به اینکه * به نشانی :

به این** اطلاع داده است قصد انعقاد قرارداد ****

را با *** منعقد نموده است و قرارداد مبلغ

این *** متعهد است در صورتی که **** کتبا" به این بانک اطلاع دهد که خواستار باز پرداخت

مبلغ پیش پرداخت داده شده به * است . هر مبلغی تا میزان مانده از مبلغ پیش پرداخت را به محض دریافت اولین تقاضای کتبی واصله از ***

بدون اینکه احتیاجی به صدور اظهار نامه یا اقدامی از مجاری قانونی و قضائی داشته باشد ، بی‌درنگ در وجه یا حواله کرد *** بپردازد .

اعتبار این ضمانت‌نامه تا آخر وقت اداری روز است و بنا به در خواست کتبی ***

واصله تا قبل از پایان وقت اداری روز تعیین شده، برای مدتی که درخواست شود قابل تمدید می‌باشد و در صورتی که **

نتواند یا نخواهد مدت این ضمانت نامه را تمدید کند و یا * موجب این تمدید را فراهم نسازد و نتواند **

را حاضر به تمدید نماید ** متعهد است بدون آنکه احتیاجی به مطالبه مجدد باشد، مبلغ درج شده در بالا را در وجه یا حواله کرد *** پرداخت کند.

مبلغ این ضمانت نامه بنا به درخواست کتبی* که در آن مبلغ پیش پرداخت واریز شده درج شده است ، طبق نظر کتبی *** که باید حداکثر ظرف سی روز از تاریخ تحویل نامه استعلام ** به *** در مورد مبلغ پیش پرداخت واریز شده واصل گردد، تقلیل داده می شود و در صورت عدم وصول پاسخی از سوی *** ضمانت نامه معادل مبلغی که *

اعلام نموده است ، تقلیل داده خواد شد .

در صورتی که تمام مبلغ این پیش پرداخت به ترتیب تعیین شده در این ضمانت نامه واریز گردد و مبلغ آن به صفر تقلیل داده شود ، این ضمانت نامه خود به خود باطل و از درجه اعتبار ساقط است ، اعم از اینکه اصل به بانک مسترد گردد تا مسترد نگردد .

* عنوان فروشنده

** عنوان بانک یا مؤسسات اعتباری غیر بانکی دارای مجوز

*** عنوان دستگاه اجرائی یا کارفرما

**** موضوع قرارداد مورد نظر

ضمانت نامه کسور حسن انجام کار

(نمونه چهار)

نظر به اینکه * به نشانی:

به این** اطلاع داده است که مقرر است مبلغ ریال

از طرف *** به عنوان استرداد کسور حسن انجام کار قرارداد ****

به *

پرداخت شود، از این رو پس از پرداخت وجه مزبور به حساب * نزد این **

این ** متعهد است در صورتی که ***

کتباً و قبل از انقضای سررسید این ضمانت نامه به این ** اطلاع دهد که *

از اجرای هر یک از تعهدات ناشی از قرارداد یاد شده تخلف ورزیده است، تا میزان ریال، هر مبلغی را که ***

مطالبه کند، به محض دریافت اولین تقاضای کتبی *** بدون اینکه احتیاجی به صدور اظهارنامه یا اقدامی از مجاری قانونی و قضائی داشته باشد، بی‌درنگ در وجه یا حواله کرد *** بپردازد.

مدت اعتبار این ضمنانتنامه تا آخر وقت اداری روز است و بنا در خواست کتبی ***

واصله تا قبل از پایان وقت اداری روز تعیین شده، برای مدتی که درخواست شود قابل تمدید و در صورتی که **

نتواند یا نخواهد مدت این ضمانت نامه را تمدید کند و یا *

موجب این تمدید را فراهم نسازد و نتواند ** را حاضر به تمدید نماید **

متعهد است بدون آنکه احتیاجی به مطالبه مجدد باشد، مبلغ درج شده در بالا را در وجه یا حواله کرد *** پرداخت کند.

* عنوان فروشنده

** عنوان بانک یا مؤسسات اعتباری غیر بانکی دارای مجوز

*** عنوان دستگاه اجرائی یا کارفرما

**** موضوع قرارداد مورد نظر

برگ پیشنهاد قیمت برای خرید لوله، اتصالات دیگر متعلقات خط نورد میلگرد و مفتول (پاکت ج)

مناقصه شماره .....

امضاء کنندهٔ زیر پس از بررسی وآگاهی و پذیرش تعهد اجرا و مسئولیت در مورد مطالب و مندرجات شرایط مناقصه، مشخصات فنی و قبول مقررات و اسناد و مدارک عمومی و شرایط خصوصی و قرارداد، تعهد نامه عدم شمول قانون منع مداخله کارمندان درمعاملات دولتی و بطور کلی تمامی مدارک و اسناد مناقصه شماره ..... مربوط به "خرید لوله، اتصالات و دیگر متعلقات خط نورد میلگرد و مفتول" و با اطلاع کامل از جمیع شرایط و عوامل موجود پیشنهاد می‌نمایم که:

جدول شماره (۱)

- **خرید لوله، اتصالات دیگر متعلقات خط نورد میلگرد و مفتول**
جمع کل قیمت پیشنهادی برای لوله ها به عدد : به حروف :
جمع کل قیمت پیشنهادی برای اتصالات به عدد : به حروف :
جمع کل قیمت پیشنهادی برای نگهدارنده لوله ها به عدد : به حروف :
جمع کل قیمت پیشنهادی برای پیچها و گسکت ها به عدد : به حروف :
جمع کل قیمت پیشنهادی برای شیرآلات به عدد : به حروف :
جمع کل قیمت پیشنهادی برای ابزارهای کنترلی به عدد : به حروف :
جمع کل قیمت پیشنهادی به عدد : **به حروف** :

توضیحات و تذکرات :

چنانچه این پیشنهاد مورد قبول قرارگیرد و به عنوان پیمانکار انتخاب شوم تعهد می‌نمایم که:

اسناد و مدارک پیمان را براساس مراتب مندرج در اسناد و مدارک مناقصه امضاء نموده و همراه تضمین انجام تعهدات حداکثر ظرف مدت یک هفته از تاریخ ابلاغ (باستثنای روزهای تعطیل) تسلیم نمایم و کلیه کارهای موضوع پیمان را درمدت مندرج دراسناد و مدارک باتمام برسانم و تأیید می‌نمایم که کلیه ضمائم اسناد و مدارک مناقصه جزء لاینفک این پیشنهاد محسوب می‌شود.

اطلاع کامل دارم که کارفرما الزامی برای واگذاری کار به هریک از پیشنهاد ها را ندارد و مختار است که بنابر صرفه و صلاح خود، هر بخش از اقلام را به بهترین پیشنهاد دهنده برای آن بخش واگذار کند.

تاریخ : / / **نام پیشنهاد دهنده :**

نام و نام خانوادگی ، سمت ، امضاء مجاز و تعهد آور و مهر پیشنهاد دهنده:

جداول پیشنهاد قیمت تفکیکی خرید لوله، اتصالات دیگر متعلقات خط نورد میلگرد و مفتول (پاکت ج)

Project	ARVAND KAVEH STEEL COMPLEX	Nº	00600.01.7200.010.000	Document Number	85-09-06-MA-010-A

VALVES WATER

PIPE TAG	FLUID	SPECIFICATION (Doc. Nº00001ESP70001-ANNEX 2)	TYPE	DN	UNITS	DN	UNITS	NORMATIVE	MATERIAL	QUANT.	HEIGHT	PRICE
CWR-150-D16A-ROD.109	CWR	D16ABF01	BUTTERFLY WAFER VALVE OF CARBON STEEL , PN 16 DIN EN 1092-1, NODULAR CAST IRON GGG 50, EN 558 Serie 20 (DIN 3202 part 3, K1 serie)	150	mm	150	mm	EN 558 Serie 20 (DIN 3202 part 3, K1 serie)	NODULAR CAST IRON GGG 50	1	7/51	
CWR-150-D16A-ROD.109	CWR	D16ABA01	BALL VALVE OF FORGED STEEL , PN16, THD, ASTM-A105, BS5351 WITH DIN 2999/1 END CONNECTIONS	15	mm	15	mm	BS5351 WITH DIN 2999/1	ASTM-A105	1	1/3	
CWR-150-D16A-ROD.109	CWR	D16AGL01	GLOBE VALVE OF CAST IRON, PN 16, RFFE, GG25, EN 558-1 WITH EN 1092 END CONNECTIONS	150	mm	150	mm	EN 558-1 WITH EN 1092	GG25	1	95	
CWR-200-D16A-ROD.10	CWR	D16ABA01	BALL VALVE OF FORGED STEEL , PN16, THD, ASTM-A105, BS5351 WITH DIN 2999/1 END CONNECTIONS	15	mm	15	mm	BS5351 WITH DIN 2999/1	ASTM-A105	1	1/3	
CWR-200-D16A-ROD.10	CWR	D16ABF01	BUTTERFLY WAFER VALVE OF CARBON STEEL , PN 16 DIN EN 1092-1, NODULAR CAST IRON GGG 50, EN 558 Serie 20 (DIN 3202 part 3, K1 serie)	200	mm	200	mm	EN 558 Serie 20 (DIN 3202 part 3, K1 serie)	NODULAR CAST IRON GGG 50	1	8/98	
CWR-20-D16A-ROD.102	CWR	D16ABA01	BALL VALVE OF FORGED STEEL , PN16, THD, ASTM-A105, BS5351 WITH DIN 2999/1 END CONNECTIONS	20	mm	20	mm	BS5351 WITH DIN 2999/1	ASTM-A105	1	2/3	
CWR-20-D16A-ROD.103	CWR	D16ABA01	BALL VALVE OF FORGED STEEL , PN16, THD, ASTM-A105, BS5351 WITH DIN 2999/1 END CONNECTIONS	20	mm	20	mm	BS5351 WITH DIN 2999/1	ASTM-A105	1	2/3	
CWR-20-D16A-ROD.106	CWR	D16ABA01	BALL VALVE OF FORGED STEEL , PN16, THD, ASTM-A105, BS5351 WITH DIN 2999/1 END CONNECTIONS	20	mm	20	mm	BS5351 WITH DIN 2999/1	ASTM-A105	1	2/3	
CWR-20-D16A-ROD.107	CWR	D16ABA01	BALL VALVE OF FORGED STEEL , PN16, THD, ASTM-A105, BS5351 WITH DIN 2999/1 END CONNECTIONS	20	mm	20	mm	BS5351 WITH DIN 2999/1	ASTM-A105	1	2/3	
CWR-20-D16A-ROD.114	CWR	D16ABA01	BALL VALVE OF FORGED STEEL , PN16, THD, ASTM-A105, BS5351 WITH DIN 2999/1 END CONNECTIONS	20	mm	20	mm	BS5351 WITH DIN 2999/1	ASTM-A105	1	2/3	
CWR-20-D16A-ROD.118	CWR	D16ABA01	BALL VALVE OF FORGED STEEL , PN16, THD, ASTM-A105, BS5351 WITH DIN 2999/1 END CONNECTIONS	20	mm	20	mm	BS5351 WITH DIN 2999/1	ASTM-A105	1	2/3	
CWR-20-D16A-ROD.119	CWR	D16ABA01	BALL VALVE OF FORGED STEEL , PN16, THD, ASTM-A105, BS5351 WITH DIN 2999/1 END CONNECTIONS	20	mm	20	mm	BS5351 WITH DIN 2999/1	ASTM-A105	1	2/3	
CWR-25-D16A-ROD.108	CWR	D16ABA01	BALL VALVE OF FORGED STEEL , PN16, THD, ASTM-A105, BS5351 WITH DIN 2999/1 END CONNECTIONS	15	mm	15	mm	BS5351 WITH DIN 2999/1	ASTM-A105	1	1/3	
CWR-25-D16A-ROD.108	CWR	D16ABA01	BALL VALVE OF FORGED STEEL , PN16, THD, ASTM-A105, BS5351 WITH DIN 2999/1 END CONNECTIONS	25	mm	25	mm	BS5351 WITH DIN 2999/1	ASTM-A105	1	3/2	
CWR-25-D16A-ROD.108	CWR	D16AGL01	GLOBE VALVE OF CAST IRON, PN 16, RFFE, GG25, EN 558-1 WITH EN 1092 END CONNECTIONS	25	mm	25	mm	EN 558-1 WITH EN 1092	GG25	1	6	
CWR-25-D16A-ROD.112	CWR	D16AGL01	GLOBE VALVE OF CAST IRON, PN 16, RFFE, GG25, EN 558-1 WITH EN 1092 END CONNECTIONS	25	mm	25	mm	EN 558-1 WITH EN 1092	GG25	1	6	
CWR-25-D16A-ROD.112	CWR	D16ABA01	BALL VALVE OF FORGED STEEL , PN16, THD, ASTM-A105, BS5351 WITH DIN 2999/1 END CONNECTIONS	15	mm	15	mm	BS5351 WITH DIN 2999/1	ASTM-A105	1	1/3	
CWR-25-D16A-ROD.112	CWR	D16ABA01	BALL VALVE OF FORGED STEEL , PN16, THD, ASTM-A105, BS5351 WITH DIN 2999/1 END CONNECTIONS	25	mm	25	mm	BS5351 WITH DIN 2999/1	ASTM-A105	1	3/2	
CWR-25-D16A-ROD.113	CWR	D16ABA01	BALL VALVE OF FORGED STEEL , PN16, THD, ASTM-A105, BS5351 WITH DIN 2999/1 END CONNECTIONS	25	mm	25	mm	BS5351 WITH DIN 2999/1	ASTM-A105	1	3/2	
CWR-25-D16A-ROD.117	CWR	D16ABA01	BALL VALVE OF FORGED STEEL , PN16, THD, ASTM-A105, BS5351 WITH DIN 2999/1 END CONNECTIONS	15	mm	15	mm	BS5351 WITH DIN 2999/1	ASTM-A105	1	1/3	
CWR-25-D16A-ROD.117	CWR	D16AGL01	GLOBE VALVE OF CAST IRON, PN 16, RFFE, GG25, EN 558-1 WITH EN 1092 END CONNECTIONS	25	mm	25	mm	EN 558-1 WITH EN 1092	GG25	1	6	
CWR-25-D16A-ROD.117	CWR	D16ABA01	BALL VALVE OF FORGED STEEL , PN16, THD, ASTM-A105, BS5351 WITH DIN 2999/1 END CONNECTIONS	25	mm	25	mm	BS5351 WITH DIN 2999/1	ASTM-A105	1	3/2	
CWR-32-D16A-ROD.104	CWR	D16ABA01	BALL VALVE OF FORGED STEEL , PN16, THD, ASTM-A105, BS5351 WITH DIN 2999/1 END CONNECTIONS	32	mm	32	mm	BS5351 WITH DIN 2999/1	ASTM-A105	1	4/3	
CWR-32-D16A-ROD.104	CWR	D16ABA01	BALL VALVE OF FORGED STEEL , PN16, THD, ASTM-A105, BS5351 WITH DIN 2999/1 END CONNECTIONS	15	mm	15	mm	BS5351 WITH DIN 2999/1	ASTM-A105	1	1/3	
CWR-32-D16A-ROD.121	CWR	D16AGL01	GLOBE VALVE OF CAST IRON, PN 16, RFFE, GG25, EN 558-1 WITH EN 1092 END CONNECTIONS	32	mm	32	mm	EN 558-1 WITH EN 1092	GG25	1	10	
CWR-32-D16A-ROD.121	CWR	D16ABA01	BALL VALVE OF FORGED STEEL , PN16, THD, ASTM-A105, BS5351 WITH DIN 2999/1 END CONNECTIONS	15	mm	15	mm	BS5351 WITH DIN 2999/1	ASTM-A105	1	1/3	
CWR-32-D16A-ROD.121	CWR	D16ABA01	BALL VALVE OF FORGED STEEL , PN16, THD, ASTM-A105, BS5351 WITH DIN 2999/1 END CONNECTIONS	32	mm	32	mm	BS5351 WITH DIN 2999/1	ASTM-A105	1	4/3	
CWR-65-D16A-ROD.122	CWR	D16ABA01	BALL VALVE OF FORGED STEEL , PN16, THD, ASTM-A105, BS5351 WITH DIN 2999/1 END CONNECTIONS	65	mm	65	mm	BS5351 WITH DIN 2999/1	ASTM-A105	1	5/8	
CWR-65-D16A-ROD.122	CWR	D16AGL01	GLOBE VALVE OF CAST IRON, PN 16, RFFE, GG25, EN 558-1 WITH EN 1092 END CONNECTIONS	65	mm	65	mm	EN 558-1 WITH EN 1092	GG25	1	12	
CWR-65-D16A-ROD.122	CWR	D16ABA01	BALL VALVE OF FORGED STEEL , PN16, THD, ASTM-A105, BS5351 WITH DIN 2999/1 END CONNECTIONS	15	mm	15	mm	BS5351 WITH DIN 2999/1	ASTM-A105	1	1/3	
CWR-40-D16A-ROD.123	CWR	D16ABA01	BALL VALVE OF FORGED STEEL , PN16, THD, ASTM-A105, BS5351 WITH DIN 2999/1 END CONNECTIONS	15	mm	15	mm	BS5351 WITH DIN 2999/1	ASTM-A105	1	1/3	
CWR-40-D16A-ROD.123	CWR	D16AGL01	GLOBE VALVE OF CAST IRON, PN 16, RFFE, GG25, EN 558-1 WITH EN 1092 END CONNECTIONS	40	mm	40	mm	EN 558-1 WITH EN 1092	GG25	1	12	
CWR-40-D16A-ROD.123	CWR	D16ABA01	BALL VALVE OF FORGED STEEL , PN16, THD, ASTM-A105, BS5351 WITH DIN 2999/1 END CONNECTIONS	40	mm	40	mm	BS5351 WITH DIN 2999/1	ASTM-A105	1	5/8	
CWR-80-D16A-ROD.105	CWR	D16ABF01	BUTTERFLY WAFER VALVE OF CARBON STEEL , PN 16 DIN EN 1092-1, NODULAR CAST IRON GGG 50, EN 558 Serie 20 (DIN 3202 part 3, K1 serie)	80	mm	80	mm	EN 558 Serie 20 (DIN 3202 part 3, K1 serie)	NODULAR CAST IRON GGG 50	1	5/6	
CWR-80-D16A-ROD.105	CWR	D16ABF01	BUTTERFLY WAFER VALVE OF CARBON STEEL , PN 16 DIN EN 1092-1, NODULAR CAST IRON GGG 50, EN 558 Serie 20 (DIN 3202 part 3, K1 serie)	80	mm	80	mm	EN 558 Serie 20 (DIN 3202 part 3, K1 serie)	NODULAR CAST IRON GGG 50	1	5/6	
CWR-80-D16A-ROD.105	CWR	D16ABA01	BALL VALVE OF FORGED STEEL , PN16, THD, ASTM-A105, BS5351 WITH DIN 2999/1 END CONNECTIONS	15	mm	15	mm	BS5351 WITH DIN 2999/1	ASTM-A105	1	1/3	
CWR-80-D16A-ROD.105	CWR	D16AGL01	GLOBE VALVE OF CAST IRON, PN 16, RFFE, GG25, EN 558-1 WITH EN 1092 END CONNECTIONS	80	mm	80	mm	EN 558-1 WITH EN 1092	GG25	1	34	
CWS-150-D16A-ROD.109	CWS	D16ABF01	BUTTERFLY WAFER VALVE OF CARBON STEEL , PN 16 DIN EN 1092-1, NODULAR CAST IRON GGG 50, EN 558 Serie 20 (DIN 3202 part 3, K1 serie)	150	mm	150	mm	EN 558 Serie 20 (DIN 3202 part 3, K1 serie)	NODULAR CAST IRON GGG 50	1	7/51	
CWS-150-D16A-ROD.109	CWS	D16ABA01	BALL VALVE OF FORGED STEEL , PN16, THD, ASTM-A105, BS5351 WITH DIN 2999/1 END CONNECTIONS	15	mm	15	mm	BS5351 WITH DIN 2999/1	ASTM-A105	1	1/3	
CWS-200-D16A-ROD.10	CWS	D16ABF01	BUTTERFLY WAFER VALVE OF CARBON STEEL , PN 16 DIN EN 1092-1, NODULAR CAST IRON GGG 50, EN 558 Serie 20 (DIN 3202 part 3, K1 serie)	200	mm	200	mm	EN 558 Serie 20 (DIN 3202 part 3, K1 serie)	NODULAR CAST IRON GGG 50	1	8/98	
CWS-200-D16A-ROD.10	CWS	D16ABA01	BALL VALVE OF FORGED STEEL , PN16, THD, ASTM-A105, BS5351 WITH DIN 2999/1 END CONNECTIONS	15	mm	15	mm	BS5351 WITH DIN 2999/1	ASTM-A105	1	1/3	
CWS-20-D16A-ROD.102	CWS	D16ABA01	BALL VALVE OF FORGED STEEL , PN16, THD, ASTM-A105, BS5351 WITH DIN 2999/1 END CONNECTIONS	20	mm	20	mm	BS5351 WITH DIN 2999/1	ASTM-A105	1	2/3	
CWS-20-D16A-ROD.103	CWS	D16ABA01	BALL VALVE OF FORGED STEEL , PN16, THD, ASTM-A105, BS5351 WITH DIN 2999/1 END CONNECTIONS	20	mm	20	mm	BS5351 WITH DIN 2999/1	ASTM-A105	1	2/3	
CWS-20-D16A-ROD.106	CWS	D16ABA01	BALL VALVE OF FORGED STEEL , PN16, THD, ASTM-A105, BS5351 WITH DIN 2999/1 END CONNECTIONS	20	mm	20	mm	BS5351 WITH DIN 2999/1	ASTM-A105	1	2/3	
CWS-20-D16A-ROD.107	CWS	D16ABA01	BALL VALVE OF FORGED STEEL , PN16, THD, ASTM-A105, BS5351 WITH DIN 2999/1 END CONNECTIONS	20	mm	20	mm	BS5351 WITH DIN 2999/1	ASTM-A105	1	2/3	
CWS-20-D16A-ROD.114	CWS	D16ABA01	BALL VALVE OF FORGED STEEL , PN16, THD, ASTM-A105, BS5351 WITH DIN 2999/1 END CONNECTIONS	20	mm	20	mm	BS5351 WITH DIN 2999/1	ASTM-A105	1	2/3	
CWS-20-D16A-ROD.114	CWS	D16ABA01	BALL VALVE OF FORGED STEEL , PN16, THD, ASTM-A105, BS5351 WITH DIN 2999/1 END CONNECTIONS	20	mm	20	mm	BS5351 WITH DIN 2999/1	ASTM-A105	1	2/3	
CWS-20-D16A-ROD.118	CWS	D16ABA01	BALL VALVE OF FORGED STEEL , PN16, THD, ASTM-A105, BS5351 WITH DIN 2999/1 END CONNECTIONS	20	mm	20	mm	BS5351 WITH DIN 2999/1	ASTM-A105	1	2/3	
CWS-20-D16A-ROD.119	CWS	D16ABA01	BALL VALVE OF FORGED STEEL , PN16, THD, ASTM-A105, BS5351 WITH DIN 2999/1 END CONNECTIONS	20	mm	20	mm	BS5351 WITH DIN 2999/1	ASTM-A105	1	2/3	
CWS-25-D16A-ROD.108	CWS	D16ABA01	BALL VALVE OF FORGED STEEL , PN16, THD, ASTM-A105, BS5351 WITH DIN 2999/1 END CONNECTIONS	15	mm	15	mm	BS5351 WITH DIN 2999/1	ASTM-A105	1	1/3	
CWS-25-D16A-ROD.108	CWS	D16ABA01	BALL VALVE OF FORGED STEEL , PN16, THD, ASTM-A105, BS5351 WITH DIN 2999/1 END CONNECTIONS	25	mm	25	mm	BS5351 WITH DIN 2999/1	ASTM-A105	1	3/2	
CWS-25-D16A-ROD.112	CWS	D16ABA01	BALL VALVE OF FORGED STEEL , PN16, THD, ASTM-A105, BS5351 WITH DIN 2999/1 END CONNECTIONS	15	mm	15	mm	BS5351 WITH DIN 2999/1	ASTM-A105	1	1/3	
CWS-25-D16A-ROD.112	CWS	D16ABA01	BALL VALVE OF FORGED STEEL , PN16, THD, ASTM-A105, BS5351 WITH DIN 2999/1 END CONNECTIONS	25	mm	25	mm	BS5351 WITH DIN 2999/1	ASTM-A105	1	3/2	
CWS-25-D16A-ROD.113	CWS	D16ABA01	BALL VALVE OF FORGED STEEL , PN16, THD, ASTM-A105, BS5351 WITH DIN 2999/1 END CONNECTIONS	25	mm	25	mm	BS5351 WITH DIN 2999/1	ASTM-A105	1	3/2	
CWS-25-D16A-ROD.117	CWS	D16ABA01	BALL VALVE OF FORGED STEEL , PN16, THD, ASTM-A105, BS5351 WITH DIN 2999/1 END CONNECTIONS	25	mm	25	mm	BS5351 WITH DIN 2999/1	ASTM-A105	1	3/2	
CWS-25-D16A-ROD.117	CWS	D16ABA01	BALL VALVE OF FORGED STEEL , PN16, THD, ASTM-A105, BS5351 WITH DIN 2999/1 END CONNECTIONS	15	mm	15	mm	BS5351 WITH DIN 2999/1	ASTM-A105	1	1/3	
CWS-32-D16A-ROD.104	CWS	D16ABA01	BALL VALVE OF FORGED STEEL , PN16, THD, ASTM-A105, BS5351 WITH DIN 2999/1 END CONNECTIONS	32	mm	32	mm	BS5351 WITH DIN 2999/1	ASTM-A105	1	4/3	
CWS-32-D16A-ROD.104	CWS	D16ABA01	BALL VALVE OF FORGED STEEL , PN16, THD, ASTM-A105, BS5351 WITH DIN 2999/1 END CONNECTIONS	15	mm	15	mm	BS5351 WITH DIN 2999/1	ASTM-A105	1	1/3	
CWS-32-D16A-ROD.121	CWS	D16ABA01	BALL VALVE OF FORGED STEEL , PN16, THD, ASTM-A105, BS5351 WITH DIN 2999/1 END CONNECTIONS	32	mm	32	mm	BS5351 WITH DIN 2999/1	ASTM-A105	1	4/3	
CWS-32-D16A-ROD.121	CWS	D16ABA01	BALL VALVE OF FORGED STEEL , PN16, THD, ASTM-A105, BS5351 WITH DIN 2999/1 END CONNECTIONS	15	mm	15	mm	BS5351 WITH DIN 2999/1	ASTM-A105	1	1/3	
CWS-40-D16A-ROD.101	CWS	D16ABA01	BALL VALVE OF FORGED STEEL , PN16, THD, ASTM-A105, BS5351 WITH DIN 2999/1 END CONNECTIONS	40	mm	40	mm	BS5351 WITH DIN 2999/1	ASTM-A105	1	5/8	
CWS-65-D16A-ROD.122	CWS	D16ABA01	BALL VALVE OF FORGED STEEL , PN16, THD, ASTM-A105, BS5351 WITH DIN 2999/1 END CONNECTIONS	15	mm	15	mm	BS5351 WITH DIN 2999/1	ASTM-A105	1	1/3	
CWS-65-D16A-ROD.122	CWS	D16ABA01	BALL VALVE OF FORGED STEEL , PN16, THD, ASTM-A105, BS5351 WITH DIN 2999/1 END CONNECTIONS	65	mm	65	mm	BS5351 WITH DIN 2999/1	ASTM-A105	1	5/8	
CWS-40-D16A-ROD.123	CWS	D16ABA01	BALL VALVE OF FORGED STEEL , PN16, THD, ASTM-A105, BS5351 WITH DIN 2999/1 END CONNECTIONS	15	mm	15	mm	BS5351 WITH DIN 2999/1	ASTM-A105	1	1/3	
CWS-40-D16A-ROD.123	CWS	D16ABA01	BALL VALVE OF FORGED STEEL , PN16, THD, ASTM-A105, BS5351 WITH DIN 2999/1 END CONNECTIONS	40	mm	40	mm	BS5351 WITH DIN 2999/1	ASTM-A105	1	5/8	
CWS-80-D16A-ROD.105	CWS	D16ABF01	BUTTERFLY WAFER VALVE OF CARBON STEEL , PN 16 DIN EN 1092-1, NODULAR CAST IRON GGG 50, EN 558 Serie 20 (DIN 3202 part 3, K1 serie)	80	mm	80	mm	EN 558 Serie 20 (DIN 3202 part 3, K1 serie)	NODULAR CAST IRON GGG 50	1	5/6	
CWS-80-D16A-ROD.105	CWS	D16ABF01	BUTTERFLY WAFER VALVE OF CARBON STEEL , PN 16 DIN EN 1092-1, NODULAR CAST IRON GGG 50, EN 558 Serie 20 (DIN 3202 part 3, K1 serie)	80	mm	80	mm	EN 558 Serie 20 (DIN 3202 part 3, K1 serie)	NODULAR CAST IRON GGG 50	1	5/6	
CWS-80-D16A-ROD.105	CWS	D16ABF01	BUTTERFLY WAFER VALVE OF CARBON STEEL , PN 16 DIN EN 1092-1, NODULAR CAST IRON GGG 50, EN 558 Serie 20 (DIN 3202 part 3, K1 serie)	80	mm	80	mm	EN 558 Serie 20 (DIN 3202 part 3, K1 serie)	NODULAR CAST IRON GGG 50	1	5/6	
CWS-80-D16A-ROD.105	CWS	D16ABF01	BUTTERFLY WAFER VALVE OF CARBON STEEL , PN 16 DIN EN 1092-1, NODULAR CAST IRON GGG 50, EN 558 Serie 20 (DIN 3202 part 3, K1 serie)	80	mm	80	mm	EN 558 Serie 20 (DIN 3202 part 3, K1 serie)	NODULAR CAST IRON GGG 50	1	5/6	
CWS-80-D16A-ROD.105	CWS	D16ABF01	BUTTERFLY WAFER VALVE OF CARBON STEEL , PN 16 DIN EN 1092-1, NODULAR CAST IRON GGG 50, EN 558 Serie 20 (DIN 3202 part 3, K1 serie)	80	mm	80	mm	EN 558 Serie 20 (DIN 3202 part 3, K1 serie)	NODULAR CAST IRON GGG 50	1	5/6	
CWS-80-D16A-ROD.105	CWS	D16ABA01	BALL VALVE OF FORGED STEEL , PN16, THD, ASTM-A105, BS5351 WITH DIN 2999/1 END CONNECTIONS	15	mm	15	mm	BS5351 WITH DIN 2999/1	ASTM-A105	1	1/3	
KWS-150-D16A-ROD.73	KWS	D16ABF01	BUTTERFLY WAFER VALVE OF CARBON STEEL , PN 16 DIN EN 1092-1, NODULAR CAST IRON GGG 50, EN 558 Serie 20 (DIN 3202 part 3, K1 serie)	150	mm	150	mm	EN 558 Serie 20 (DIN 3202 part 3, K1 serie)	NODULAR CAST IRON GGG 50	1	7/51	
KWS-150-D16A-ROD.74	KWS	D16ABF01	BUTTERFLY WAFER VALVE OF CARBON STEEL , PN 16 DIN EN 1092-1, NODULAR CAST IRON GGG 50, EN 558 Serie 20 (DIN 3202 part 3, K1 serie)	150	mm	150	mm	EN 558 Serie 20 (DIN 3202 part 3, K1 serie)	NODULAR CAST IRON GGG 50	1	7/51	
KWS-150-D16A-ROD.75	KWS	D16ABF01	BUTTERFLY WAFER VALVE OF CARBON STEEL , PN 16 DIN EN 1092-1, NODULAR CAST IRON GGG 50, EN 558 Serie 20 (DIN 3202 part 3, K1 serie)	150	mm	150	mm	EN 558 Serie 20 (DIN 3202 part 3, K1 serie)	NODULAR CAST IRON GGG 50	1	7/51	
KWS-200-D16A-ROD.76	KWS	D16ABF01	BUTTERFLY WAFER VALVE OF CARBON STEEL , PN 16 DIN EN 1092-1, NODULAR CAST IRON GGG 50, EN 558 Serie 20 (DIN 3202 part 3, K1 serie)	200	mm	200	mm	EN 558 Serie 20 (DIN 3202 part 3, K1 serie)	NODULAR CAST IRON GGG 50	1	8/98	
KWS-200-D16A-ROD.76	KWS	D16ABF01	BUTTERFLY WAFER VALVE OF CARBON STEEL , PN 16 DIN EN 1092-1, NODULAR CAST IRON GGG 50, EN 558 Serie 20 (DIN 3202 part 3, K1 serie)	200	mm	200	mm	EN 558 Serie 20 (DIN 3202 part 3, K1 serie)	NODULAR CAST IRON GGG 50	1	8/98	
KWS-200-D16A-ROD.76	KWS	D16ABF01	BUTTERFLY WAFER VALVE OF CARBON STEEL , PN 16 DIN EN 1092-1, NODULAR CAST IRON GGG 50, EN 558 Serie 20 (DIN 3202 part 3, K1 serie)	200	mm	200	mm	EN 558 Serie 20 (DIN 3202 part 3, K1 serie)	NODULAR CAST IRON GGG 50	1	8/98	
KWS-200-D16A-ROD.81	KWS	D16ABF01	BUTTERFLY WAFER VALVE OF CARBON STEEL , PN 16 DIN EN 1092-1, NODULAR CAST IRON GGG 50, EN 558 Serie 20 (DIN 3202 part 3, K1 serie)	200	mm	200	mm	EN 558 Serie 20 (DIN 3202 part 3, K1 serie)	NODULAR CAST IRON GGG 50	1	8/98	

PIPE TAG	FLUID	SPECIFICATION (Doc. Nº00001ESP70001-ANNEX 2)	TYPE	DN	UNITS	DN	UNITS	NORMATIVE	MATERIAL	QUANT.	HEIGHT	PRICE
KWS-200-D16A-ROD.81	KWS	D16ABF01	BUTTERFLY WAFER VALVE OF CARBON STEEL , PN 16 DIN EN 1092-1, NODULAR CAST IRON GGG 50, EN 558 Serie 20 (DIN 3202 part 3, K1 serie)	200	mm	200	mm	EN 558 Serie 20 (DIN 3202 part 3, K1 serie)	NODULAR CAST IRON GGG 50	1	8/98	
KWS-200-D16A-ROD.81	KWS	D16ABF01	BUTTERFLY WAFER VALVE OF CARBON STEEL , PN 16 DIN EN 1092-1, NODULAR CAST IRON GGG 50, EN 558 Serie 20 (DIN 3202 part 3, K1 serie)	200	mm	200	mm	EN 558 Serie 20 (DIN 3202 part 3, K1 serie)	NODULAR CAST IRON GGG 50	1	8/98	
KWS-25-D16A-ROD.77	KWS	D16ABA01	BALL VALVE OF FORGED STEEL , PN16, THD, ASTM-A105, BS5351 WITH DIN 2999/1 END CONNECTIONS	25	mm	25	mm	BS5351 WITH DIN 2999/1	ASTM-A105	1	3/2	
KWS-25-D16A-ROD.77	KWS	D16AGL01	GLOBE VALVE OF CAST IRON, PN 16, RFFE, GG25, EN 558-1 WITH EN 1092 END CONNECTIONS	25	mm	25	mm	EN 558-1 WITH EN 1092	GG25	1	6	
KWS-25-D16-A-ROD.84	KWS	D16AGL01	GLOBE VALVE OF CAST IRON, PN 16, RFFE, GG25, EN 558-1 WITH EN 1092 END CONNECTIONS	25	mm	25	mm	EN 558-1 WITH EN 1092	GG25	1	6	
KWS-25-D16-A-ROD.84	KWS	D16ABA01	BALL VALVE OF FORGED STEEL , PN16, THD, ASTM-A105, BS5351 WITH DIN 2999/1 END CONNECTIONS	25	mm	25	mm	BS5351 WITH DIN 2999/1	ASTM-A105	1	3/2	
KWS-25-D16-A-ROD.88	KWS	D16ABA01	BALL VALVE OF FORGED STEEL , PN16, THD, ASTM-A105, BS5351 WITH DIN 2999/1 END CONNECTIONS	25	mm	25	mm	BS5351 WITH DIN 2999/1	ASTM-A105	1	3/2	
KWS-25-D16-A-ROD.88	KWS	D16AGL01	GLOBE VALVE OF CAST IRON, PN 16, RFFE, GG25, EN 558-1 WITH EN 1092 END CONNECTIONS	25	mm	25	mm	EN 558-1 WITH EN 1092	GG25	1	6	
KWS-25-D16-A-ROD.97	KWS	D16AGL01	GLOBE VALVE OF CAST IRON, PN 16, RFFE, GG25, EN 558-1 WITH EN 1092 END CONNECTIONS	25	mm	25	mm	EN 558-1 WITH EN 1092	GG25	1	6	
KWS-25-D16-A-ROD.97	KWS	D16ABA01	BALL VALVE OF FORGED STEEL , PN16, THD, ASTM-A105, BS5351 WITH DIN 2999/1 END CONNECTIONS	25	mm	25	mm	BS5351 WITH DIN 2999/1	ASTM-A105	1	3/2	
CWR-150-D16A-ROD.109	CWR		RELIEF VALVE BETWEEN FLANGES RELIEF PRESSURE 16 BAR	25	mm	40	mm	API STANDARD	ASTM-A105	1	4/5	
CWR-32-D16A-ROD.104	CWR		RELIEF VALVE BETWEEN FLANGES RELIEF PRESSURE 16 BAR	25	mm	40	mm	API STANDARD	ASTM-A105	1	4/5	
CWS-65-D16A-ROD.122	CWR		RELIEF VALVE BETWEEN FLANGES RELIEF PRESSURE 16 BAR	25	mm	40	mm	API STANDARD	ASTM-A105	1	4/5	
CWR-40-D16A-ROD.123	CWR		RELIEF VALVE BETWEEN FLANGES RELIEF PRESSURE 16 BAR	25	mm	40	mm	API STANDARD	ASTM-A105	1	4/5	
CWS-65-D16A-ROD.124	CWS	D16ABA01	BALL VALVE OF FORGED STEEL , PN16, THD, ASTM-A105, BS5351 WITH DIN 2999/1 END CONNECTIONS	20	mm	20	mm	BS5351 WITH DIN 2999/1	ASTM-A105	1	2/3	
CWS-65-D16A-ROD.124	CWS	D16ABA01	BALL VALVE OF FORGED STEEL , PN16, THD, ASTM-A105, BS5351 WITH DIN 2999/1 END CONNECTIONS	20	mm	20	mm	BS5351 WITH DIN 2999/1	ASTM-A105	1	2/3	

ITEM TAG	LINE	INSTRUMENT TYPE	ISA	2º LEVEL	GENERAL		DESIGN		PRESSURE (bar)			TEMP (Cº)		FLOW (kg/h)		SPEC. VOL.(m3/Kg)	VISCOSITY (Kg/m.s)	VELOCITY (m/s)	DENSITY (kg/m3)	PRICE
	Nº				P&ID (Nº)	SHEET	PRESSURE (barg)	TEMP (ºC)	OPERATION	MAXIMUM	SET POINT	OPERATION	MAXIMUM	MINIMUM	MAXIMUM	OPERATION	OPERATION	MAXIMUM	OPERATION	
KWS-PI-041910	KWS-200-D16A-ROD.76	Pressure Indicator	P-I	041910	00600.01.6064.01.001	1	16	80	6			30				0/0010041	7/98E-04	2	995/9	
KWS-TI-042804	KWS-200-D16A-ROD.76	Temperature Indicator	T-I	042804	00600.01.6064.01.001	1	16	80	2			50				0/00101201	5/47E-04	2	988/1	
CWS-PI-CP001	CWS-32-D16A-ROD.104	Pressure Indicator	P-I	CP001	00600.01.6064.01.001	2	16	80	6			30				0/0010041	7/98E-04	2	995/9	
CWS-TI-CT001	CWS-32-D16A-ROD.104	Temperature Indicator	T-I	CT001	00600.01.6064.01.001	2	16	80	6			30				0/0010041	7/98E-04	2	995/9	
CWS-PI-CP003	CWR-32-D16A-ROD.104	Pressure Indicator	P-I	CP003	00600.01.6064.01.001	2	16	80	6			30				0/0010041	7/98E-04	2	995/9	
CWS-TI-CT003	CWR-32-D16A-ROD.104	Temperature Indicator	T-I	CT003	00600.01.6064.01.001	2	16	80	6			30				0/0010041	7/98E-04	2	995/9	
CWS-PI-CP004	CWS-80-D16A-ROD.105	Pressure Indicator	P-I	CP004	00600.01.6064.01.001	2	16	80	6			30				0/0010041	7/98E-04	2	995/9	
CWS-TI-CT004	CWS-80-D16A-ROD.105	Temperature Indicator	T-I	CT004	00600.01.6064.01.001	2	16	80	6			30				0/0010041	7/98E-04	2	995/9	
CWS-PI-CP007	CWR-80-D16A-ROD.105	Pressure Indicator	P-I	CP007	00600.01.6064.01.001	2	16	80	6			30				0/0010041	7/98E-04	2	995/9	
CWS-TI-CT007	CWR-80-D16A-ROD.105	Temperature Indicator	T-I	CT007	00600.01.6064.01.001	2	16	80	6			30				0/0010041	7/98E-04	2	995/9	
CWS-PI-CP008	CWS-25-D16A-ROD.108	Pressure Indicator	P-I	CP008	00600.01.6064.01.001	2	16	80	6			30				0/0010041	7/98E-04	2	995/9	
CWS-PI-CP009	CWR-25-D16A-ROD.108	Pressure Indicator	P-I	CP009	00600.01.6064.01.001	2	16	80	6			30				0/0010041	7/98E-04	2	995/9	
CWS-TI-CT009	CWR-25-D16A-ROD.108	Temperature Indicator	T-I	CT009	00600.01.6064.01.001	2	16	80	6			30				0/0010041	7/98E-04	2	995/9	
CWS-PI-CP010	CWS-150-D16A-ROD.109	Pressure Indicator	P-I	CP010	00600.01.6064.01.001	2	16	80	6			30				0/0010041	7/98E-04	2	995/9	
CWS-PI-CP011	CWR-150-D16A-ROD.109	Pressure Indicator	P-I	CP011	00600.01.6064.01.001	2	16	80	6			30				0/0010041	7/98E-04	2	995/9	
CWS-TI-CT011	CWR-150-D16A-ROD.109	Temperature Indicator	T-I	CT011	00600.01.6064.01.001	2	16	80	6			30				0/0010041	7/98E-04	2	995/9	
CWS-PI-CP012	CWS-25-D16A-ROD.112	Pressure Indicator	P-I	CP012	00600.01.6064.01.001	2	16	80	6			30				0/0010041	7/98E-04	2	995/9	
CWS-PI-CP013	CWR-25-D16A-ROD.112	Pressure Indicator	P-I	CP013	00600.01.6064.01.001	2	16	80	6			30				0/0010041	7/98E-04	2	995/9	
CWS-TI-CT013	CWR-25-D16A-ROD.112	Temperature Indicator	T-I	CT013	00600.01.6064.01.001	2	16	80	6			30				0/0010041	7/98E-04	2	995/9	
CWS-PI-CP014	CWS-25-D16A-ROD.117	Pressure Indicator	P-I	CP014	00600.01.6064.01.001	2	16	80	6			30				0/0010041	7/98E-04	2	995/9	
CWS-PI-CP015	CWR-25-D16A-ROD.117	Pressure Indicator	P-I	CP015	00600.01.6064.01.001	2	16	80	6			30				0/0010041	7/98E-04	2	995/9	
CWS-TI-CT015	CWR-25-D16A-ROD.117	Temperature Indicator	T-I	CT015	00600.01.6064.01.001	2	16	80	6			30				0/0010041	7/98E-04	2	995/9	
CWS-PI-CP016	CWR-32-D16A-ROD.121	Pressure Indicator	P-I	CP016	00600.01.6064.01.001	2	16	80	6			30				0/0010041	7/98E-04	2	995/9	
CWS-TI-CT016	CWR-32-D16A-ROD.121	Temperature Indicator	T-I	CT016	00600.01.6064.01.001	2	16	80	6			30				0/0010041	7/98E-04	2	995/9	
CWS-PI-CP017	CWS-32-D16A-ROD.121	Pressure Indicator	P-I	CP017	00600.01.6064.01.001	2	16	80	6			30				0/0010041	7/98E-04	2	995/9	
CWS-TI-CT017	CWS-32-D16A-ROD.121	Temperature Indicator	T-I	CT017	00600.01.6064.01.001	2	16	80	6			30				0/0010041	7/98E-04	2	995/9	
CWS-PI-CP018	CWR-40-D16A-ROD.122	Pressure Indicator	P-I	CP018	00600.01.6064.01.001	2	16	80	6			30				0/0010041	7/98E-04	2	995/9	
CWS-TI-CT018	CWR-40-D16A-ROD.122	Temperature Indicator	T-I	CT018	00600.01.6064.01.001	2	16	80	6			30				0/0010041	7/98E-04	2	995/9	
CWS-PI-CP019	CWS-40-D16A-ROD.122	Pressure Indicator	P-I	CP019	00600.01.6064.01.001	2	16	80	6			30				0/0010041	7/98E-04	2	995/9	
CWS-TI-CT019	CWS-40-D16A-ROD.122	Temperature Indicator	T-I	CT019	00600.01.6064.01.001	2	16	80	6			30				0/0010041	7/98E-04	2	995/9	
CWS-PI-CP020	CWR-40-D16A-ROD.123	Pressure Indicator	P-I	CP020	00600.01.6064.01.001	2	16	80	6			30				0/0010041	7/98E-04	2	995/9	

CWS-TI-CT020	CWR-40-D16A-ROD.123	Temperature Indicator	T-I	CT020	00600.01.6064.01.001	2	16	80	6			30				0/0010041	7/98E-04	2	995/9	
CWS-PI-CP021	CWS-40-D16A-ROD.123	Pressure Indicator	P-I	CP021	00600.01.6064.01.001	2	16	80	6			30				0/0010041	7/98E-04	2	995/9	
CWS-TI-CT021	CWS-40-D16A-ROD.123	Temperature Indicator	T-I	CT021	00600.01.6064.01.001	2	16	80	6			30				0/0010041	7/98E-04	2	995/9	
CWS-FS-CS001	CWR-80-D16A-ROD.105	Flow Indicator	F-I	CS001	00600.01.6064.01.001	2	16	80	6			30				0/0010041	7/98E-04	2	995/9	
CWS-FS-CS002	CWR-80-D16A-ROD.105	Flow Indicator	F-I	CS002	00600.01.6064.01.001	2	16	80	6			30				0/0010041	7/98E-04	2	995/9	

ACCESORIES WATER

PIPE TAG	FLUID	SPECI.	TYPE	DN	UNITS	DN	UNITS	NORMATIVE	MATERIAL	QUANT.	HEIGHT	PRICE
CWR-150-D16A-ROD.109	CWR	D16A	WELDING NECK FLANGE, RFFE/WN, PN 16, S235JRG2/1,0432/A105, DIN EN 1092-1	150	mm	150	mm	DIN EN 1092-1	S235JRG2/1,0432/A105	1	7/75	
CWR-150-D16A-ROD.109	CWR	D16A	THREDOLET, CL3000, THD, ASTM-A105, ASME B16.11	150	mm	25	mm	ASME B16.11	ASTM-A105	1	0/27	
CWR-150-D16A-ROD.109	CWR	D16A	PLAIN FLANGE, FFFE/WN, PN 16, S235JRG2/1,0432/A105, DIN EN 1092-1	150	mm	150	mm	DIN EN 1092-1	S235JRG2/1,0432/A105	1	7/75	
CWR-150-D16A-ROD.109	CWR	D16A	PLAIN FLANGE, FFFE/WN, PN 16, S235JRG2/1,0432/A105, DIN EN 1092-1	150	mm	150	mm	DIN EN 1092-1	S235JRG2/1,0432/A105	1	7/75	
CWR-150-D16A-ROD.109	CWR	D16A	SOCKOLET, CL3000, SW, ASTM-A105, ASME B16.11	150	mm	15	mm	ASME B16.11	ASTM-A105	1	0/14	
CWR-150-D16A-ROD.109	CWR	D16A	90 DEG ELBOW, CL 3000, SW, ASTM A105, ASME B16.11	25	mm	25	mm	ASME B16.11	ASTM A105	1	0/52	
CWR-150-D16A-ROD.109	CWR	D16A	NIPPLE, MTE/PE, 4 MM, PE/THD (DIN 2999), DIN EN 10255, P235GH/1.0305/A106, L=100MM	15	mm	15	mm	DIN EN 10255	P235GH/1.0305/A106	1	0/01	
CWR-150-D16A-ROD.109	CWR	D16A	SOCKOLET, CL3000, SW, ASTM-A105, ASME B16.11	150	mm	25	mm	ASME B16.11	ASTM-A105	1	0/27	
CWR-150-D16A-ROD.109	CWR	D16A	WELDING NECK FLANGE, RFFE/WN, PN 16, S235JRG2/1,0432/A105, DIN EN 1092-1	25	mm	25	mm	DIN EN 1092-1	S235JRG2/1,0432/A105	1	1/14	
CWR-150-D16A-ROD.109	CWR	D16A	45 DEG ELBOW, 3D, BW, P235GH/1.0305/A106, DIN EN 10253-1	150	mm	150	mm	DIN EN 10253-1	P235GH/1.0305/A106	1	3/25	
CWR-150-D16A-ROD.109	CWR	D16A	WELDING NECK FLANGE, RFFE/WN, PN 16, S235JRG2/1,0432/A105, DIN EN 1092-1	150	mm	150	mm	DIN EN 1092-1	S235JRG2/1,0432/A105	1	7/75	
CWR-150-D16A-ROD.109	CWR	D16A	WELDING NECK FLANGE, RFFE/WN, PN 16, S235JRG2/1,0432/A105, DIN EN 1092-1	150	mm	150	mm	DIN EN 1092-1	S235JRG2/1,0432/A105	1	7/75	
CWR-200-D16A-ROD.10	CWR	D16A	WELDING NECK FLANGE, RFFE/WN, PN 16, S235JRG2/1,0432/A105, DIN EN 1092-1	25	mm	25	mm	DIN EN 1092-1	S235JRG2/1,0432/A105	1	1/14	
CWR-200-D16A-ROD.10	CWR	D16A	90 DEG ELBOW, 3D, BW, P235GH/1.0305/A106, DIN EN 10253-1	200	mm	200	mm	DIN EN 10253-1	P235GH/1.0305/A106	1	15/8	
CWR-200-D16A-ROD.10	CWR	D16A	90 DEG ELBOW, 3D, BW, P235GH/1.0305/A106, DIN EN 10253-1	200	mm	200	mm	DIN EN 10253-1	P235GH/1.0305/A106	1	15/8	
CWR-200-D16A-ROD.10	CWR	D16A	90 DEG ELBOW, 3D, BW, P235GH/1.0305/A106, DIN EN 10253-1	200	mm	200	mm	DIN EN 10253-1	P235GH/1.0305/A106	1	15/8	
CWR-200-D16A-ROD.10	CWR	D16A	90 DEG ELBOW, 3D, BW, P235GH/1.0305/A106, DIN EN 10253-1	200	mm	200	mm	DIN EN 10253-1	P235GH/1.0305/A106	1	15/8	
CWR-200-D16A-ROD.10	CWR	D16A	90 DEG ELBOW, 3D, BW, P235GH/1.0305/A106, DIN EN 10253-1	200	mm	200	mm	DIN EN 10253-1	P235GH/1.0305/A106	1	15/8	
CWR-200-D16A-ROD.10	CWR	D16A	90 DEG ELBOW, 3D, BW, P235GH/1.0305/A106, DIN EN 10253-1	200	mm	200	mm	DIN EN 10253-1	P235GH/1.0305/A106	1	15/8	
CWR-200-D16A-ROD.10	CWR	D16A	90 DEG ELBOW, 3D, BW, P235GH/1.0305/A106, DIN EN 10253-1	200	mm	200	mm	DIN EN 10253-1	P235GH/1.0305/A106	1	15/8	
CWR-200-D16A-ROD.10	CWR	D16A	WELDING NECK FLANGE, RFFE/WN, PN 16, S235JRG2/1,0432/A105, DIN EN 1092-1	200	mm	200	mm	DIN EN 1092-1	S235JRG2/1,0432/A105	1	11	
CWR-200-D16A-ROD.10	CWR	D16A	90 DEG ELBOW, 3D, BW, P235GH/1.0305/A106, DIN EN 10253-1	200	mm	200	mm	DIN EN 10253-1	P235GH/1.0305/A106	1	15/8	
CWR-200-D16A-ROD.10	CWR	D16A	90 DEG ELBOW, 3D, BW, P235GH/1.0305/A106, DIN EN 10253-1	200	mm	200	mm	DIN EN 10253-1	P235GH/1.0305/A106	1	15/8	
CWR-200-D16A-ROD.10	CWR	D16A	90 DEG ELBOW, 3D, BW, P235GH/1.0305/A106, DIN EN 10253-1	200	mm	200	mm	DIN EN 10253-1	P235GH/1.0305/A106	1	15/8	
CWR-200-D16A-ROD.10	CWR	D16A	90 DEG ELBOW, 3D, BW, P235GH/1.0305/A106, DIN EN 10253-1	200	mm	200	mm	DIN EN 10253-1	P235GH/1.0305/A106	1	15/8	
CWR-200-D16A-ROD.10	CWR	D16A	90 DEG ELBOW, 3D, BW, P235GH/1.0305/A106, DIN EN 10253-1	200	mm	200	mm	DIN EN 10253-1	P235GH/1.0305/A106	1	15/8	
CWR-200-D16A-ROD.10	CWR	D16A	90 DEG ELBOW, CL 3000, SW, ASTM A105, ASME B16.11	25	mm	25	mm	ASME B16.11	ASTM A105	1	0/52	
CWR-200-D16A-ROD.10	CWR	D16A	PLAIN FLANGE, FFFE/WN, PN 16, S235JRG2/1,0432/A105, DIN EN 1092-1	200	mm	200	mm	DIN EN 1092-1	S235JRG2/1,0432/A105	1	9/85	
CWR-200-D16A-ROD.10	CWR	D16A	PLAIN FLANGE, FFFE/WN, PN 16, S235JRG2/1,0432/A105, DIN EN 1092-1	200	mm	200	mm	DIN EN 1092-1	S235JRG2/1,0432/A105	1	9/85	
CWR-200-D16A-ROD.10	CWR	D16A	SOCKOLET, CL3000, SW, ASTM-A105, ASME B16.11	200	mm	15	mm	ASME B16.11	ASTM-A105	1	0/14	
CWR-200-D16A-ROD.10	CWR	D16A	WELDING NECK FLANGE, RFFE/WN, PN 16, S235JRG2/1,0432/A105, DIN EN 1092-1	200	mm	200	mm	DIN EN 1092-1	S235JRG2/1,0432/A105	1	11	
CWR-200-D16A-ROD.10	CWR	D16A	SOCKOLET, CL3000, SW, ASTM-A105, ASME B16.11	200	mm	25	mm	ASME B16.11	ASTM-A105	1	0/27	
CWR-200-D16A-ROD.10	CWR	D16A	WELDING NECK FLANGE, RFFE/WN, PN 16, S235JRG2/1,0432/A105, DIN EN 1092-1	200	mm	200	mm	DIN EN 1092-1	S235JRG2/1,0432/A105	1	11	
CWR-200-D16A-ROD.10	CWR	D16A	THREDOLET, CL3000, THD, ASTM-A105, ASME B16.11	200	mm	25	mm	ASME B16.11	ASTM-A105	1	0/27	
CWR-200-D16A-ROD.10	CWR	D16A	NIPPLE, MTE/PE, 4 MM, PE/THD (DIN 2999), DIN EN 10255, P235GH/1.0305/A106, L=100MM	15	mm	15	mm	DIN EN 10255	P235GH/1.0305/A106	1	0/01	
CWR-200-D16A-ROD.10	CWR	D16A	REDUCING BRANCH TEE, BW, P235GH/1.0305/A106, DIN EN 10253-1	200	mm	150	mm	DIN EN 10253-1	P235GH/1.0305/A106	1	18/3	
CWR-20-D16A-ROD.102	CWR	D16A	90 DEG ELBOW, CL 3000, SW, ASTM A105, ASME B16.11	20	mm	20	mm	ASME B16.11	ASTM A105	1	0/32	
CWR-20-D16A-ROD.102	CWR	D16A	90 DEG ELBOW, CL 3000, SW, ASTM A105, ASME B16.11	20	mm	20	mm	ASME B16.11	ASTM A105	1	0/32	
CWR-20-D16A-ROD.102	CWR	D16A	90 DEG ELBOW, CL 3000, SW, ASTM A105, ASME B16.11	20	mm	20	mm	ASME B16.11	ASTM A105	1	0/32	
CWR-20-D16A-ROD.102	CWR	D16A	WELDING NECK FLANGE, RFFE/WN, PN 16, S235JRG2/1,0432/A105, DIN EN 1092-1	20	mm	20	mm	DIN EN 1092-1	S235JRG2/1,0432/A105	1	0/952	
CWR-20-D16A-ROD.102	CWR	D16A	90 DEG ELBOW, CL 3000, SW, ASTM A105, ASME B16.11	20	mm	20	mm	ASME B16.11	ASTM A105	1	0/32	
CWR-20-D16A-ROD.103	CWR	D16A	WELDING NECK FLANGE, RFFE/WN, PN 16, S235JRG2/1,0432/A105, DIN EN 1092-1	20	mm	20	mm	DIN EN 1092-1	S235JRG2/1,0432/A105	1	0/952	
CWR-20-D16A-ROD.103	CWR	D16A	90 DEG ELBOW, CL 3000, SW, ASTM A105, ASME B16.11	20	mm	20	mm	ASME B16.11	ASTM A105	1	0/32	
CWR-20-D16A-ROD.103	CWR	D16A	90 DEG ELBOW, CL 3000, SW, ASTM A105, ASME B16.11	20	mm	20	mm	ASME B16.11	ASTM A105	1	0/32	
CWR-20-D16A-ROD.103	CWR	D16A	90 DEG ELBOW, CL 3000, SW, ASTM A105, ASME B16.11	20	mm	20	mm	ASME B16.11	ASTM A105	1	0/32	
CWR-20-D16A-ROD.103	CWR	D16A	90 DEG ELBOW, CL 3000, SW, ASTM A105, ASME B16.11	20	mm	20	mm	ASME B16.11	ASTM A105	1	0/32	
CWR-20-D16A-ROD.106	CWR	D16A	SOCKOLET, CL3000, SW, ASTM-A105, ASME B16.11	300	mm	20	mm	ASME B16.11	ASTM-A105	1	0/15	
CWR-20-D16A-ROD.106	CWR	D16A	90 DEG ELBOW, CL 3000, SW, ASTM A105, ASME B16.11	20	mm	20	mm	ASME B16.11	ASTM A105	1	0/32	
CWR-20-D16A-ROD.106	CWR	D16A	90 DEG ELBOW, CL 3000, SW, ASTM A105, ASME B16.11	20	mm	20	mm	ASME B16.11	ASTM A105	1	0/32	
CWR-20-D16A-ROD.106	CWR	D16A	90 DEG ELBOW, CL 3000, SW, ASTM A105, ASME B16.11	20	mm	20	mm	ASME B16.11	ASTM A105	1	0/32	
CWR-20-D16A-ROD.106	CWR	D16A	WELDING NECK FLANGE, RFFE/WN, PN 16, S235JRG2/1,0432/A105, DIN EN 1092-1	20	mm	20	mm	DIN EN 1092-1	S235JRG2/1,0432/A105	1	0/952	
CWR-20-D16A-ROD.107	CWR	D16A	90 DEG ELBOW, CL 3000, SW, ASTM A105, ASME B16.11	20	mm	20	mm	ASME B16.11	ASTM A105	1	0/32	
CWR-20-D16A-ROD.107	CWR	D16A	90 DEG ELBOW, CL 3000, SW, ASTM A105, ASME B16.11	20	mm	20	mm	ASME B16.11	ASTM A105	1	0/32	
CWR-20-D16A-ROD.107	CWR	D16A	SOCKOLET, CL3000, SW, ASTM-A105, ASME B16.11	300	mm	20	mm	ASME B16.11	ASTM-A105	1	0/15	
CWR-20-D16A-ROD.107	CWR	D16A	90 DEG ELBOW, CL 3000, SW, ASTM A105, ASME B16.11	20	mm	20	mm	ASME B16.11	ASTM A105	1	0/32	
CWR-20-D16A-ROD.107	CWR	D16A	WELDING NECK FLANGE, RFFE/WN, PN 16, S235JRG2/1,0432/A105, DIN EN 1092-1	20	mm	20	mm	DIN EN 1092-1	S235JRG2/1,0432/A105	1	0/952	
CWR-20-D16A-ROD.114	CWR	D16A	WELDING NECK FLANGE, RFFE/WN, PN 16, S235JRG2/1,0432/A105, DIN EN 1092-1	20	mm	20	mm	DIN EN 1092-1	S235JRG2/1,0432/A105	1	0/952	
CWR-20-D16A-ROD.114	CWR	D16A	90 DEG ELBOW, CL 3000, SW, ASTM A105, ASME B16.11	20	mm	20	mm	ASME B16.11	ASTM A105	1	0/32	
CWR-20-D16A-ROD.114	CWR	D16A	90 DEG ELBOW, CL 3000, SW, ASTM A105, ASME B16.11	20	mm	20	mm	ASME B16.11	ASTM A105	1	0/32	
CWR-20-D16A-ROD.114	CWR	D16A	SOCKOLET, CL3000, SW, ASTM-A105, ASME B16.11	150	mm	20	mm	ASME B16.11	ASTM-A105	1	0/15	
CWR-20-D16A-ROD.114	CWR	D16A	90 DEG ELBOW, CL 3000, SW, ASTM A105, ASME B16.11	20	mm	20	mm	ASME B16.11	ASTM A105	1	0/32	
CWR-20-D16A-ROD.118	CWR	D16A	SOCKOLET, CL3000, SW, ASTM-A105, ASME B16.11	50	mm	20	mm	ASME B16.11	ASTM-A105	1	0/15	
CWR-20-D16A-ROD.118	CWR	D16A	WELDING NECK FLANGE, RFFE/WN, PN 16, S235JRG2/1,0432/A105, DIN EN 1092-1	20	mm	20	mm	DIN EN 1092-1	S235JRG2/1,0432/A105	1	0/952	
CWR-20-D16A-ROD.119	CWR	D16A	SOCKOLET, CL3000, SW, ASTM-A105, ASME B16.11	50	mm	20	mm	ASME B16.11	ASTM-A105	1	0/15	
CWR-20-D16A-ROD.119	CWR	D16A	WELDING NECK FLANGE, RFFE/WN, PN 16, S235JRG2/1,0432/A105, DIN EN 1092-1	20	mm	20	mm	DIN EN 1092-1	S235JRG2/1,0432/A105	1	0/952	
CWR-25-D16A-ROD.108	CWR	D16A	90 DEG ELBOW, CL 3000, SW, ASTM A105, ASME B16.11	25	mm	25	mm	ASME B16.11	ASTM A105	1	0/52	
CWR-25-D16A-ROD.108	CWR	D16A	90 DEG ELBOW, CL 3000, SW, ASTM A105, ASME B16.11	25	mm	25	mm	ASME B16.11	ASTM A105	1	0/52	

PIPE TAG	FLUID	SPECI.	TYPE	DN	UNITS	DN	UNITS	NORMATIVE	MATERIAL	QUANT.	HEIGHT	PRICE
CWR-25-D16A-ROD.108	CWR	D16A	90 DEG ELBOW, CL 3000, SW, ASTM A105, ASME B16.11	25	mm	25	mm	ASME B16.11	ASTM A105	1	0/52	
CWR-25-D16A-ROD.108	CWR	D16A	UNION NUT, CL3000, SW, ASTM-A105, ASME B16.11	25	mm	25	mm	ASME B16.11	ASTM-A105	1	0/66	
CWR-25-D16A-ROD.108	CWR	D16A	90 DEG ELBOW, CL 3000, SW, ASTM A105, ASME B16.11	25	mm	25	mm	ASME B16.11	ASTM A105	1	0/52	
CWR-25-D16A-ROD.108	CWR	D16A	90 DEG ELBOW, CL 3000, SW, ASTM A105, ASME B16.11	25	mm	25	mm	ASME B16.11	ASTM A105	1	0/52	
CWR-25-D16A-ROD.108	CWR	D16A	90 DEG ELBOW, CL 3000, SW, ASTM A105, ASME B16.11	25	mm	25	mm	ASME B16.11	ASTM A105	1	0/52	
CWR-25-D16A-ROD.108	CWR	D16A	SOCKOLET, CL3000, SW, ASTM-A105, ASME B16.11	200	mm	25	mm	ASME B16.11	ASTM-A105	1	0/27	
CWR-25-D16A-ROD.108	CWR	D16A	NIPPLE, MTE/PE, 4 MM, PE/THD (DIN 2999), DIN EN 10255, P235GH/1.0305/A106, L=100MM	15	mm	15	mm	DIN EN 10255	P235GH/1.0305/A106	1	0/01	
CWR-25-D16A-ROD.108	CWR	D16A	90 DEG ELBOW, CL 3000, SW, ASTM A105, ASME B16.11	25	mm	25	mm	ASME B16.11	ASTM A105	1	0/52	
CWR-25-D16A-ROD.108	CWR	D16A	CONCENTRIC REDUCER, BW, P235GH/1.0305/A106, DIN EN 10253-1	100	mm	50	mm	DIN EN 10253-1	P235GH/1.0305/A106	1	1/6	
CWR-25-D16A-ROD.108	CWR	D16A	CONCENTRIC REDUCER, BW, P235GH/1.0305/A106, DIN EN 10253-1	100	mm	50	mm	DIN EN 10253-1	P235GH/1.0305/A106	1	1/6	
CWR-25-D16A-ROD.108	CWR	D16A	THREDOLET, CL3000, THD, ASTM-A105, ASME B16.11	100	mm	25	mm	ASME B16.11	ASTM-A105	1	0/27	
CWR-25-D16A-ROD.108	CWR	D16A	CONCENTRIC REDUCER, CL3000, SW, ASTM-A105, ASME B16.11	50	mm	25	mm	ASME B16.11	ASTM-A105	1	0/41	
CWR-25-D16A-ROD.108	CWR	D16A	CONCENTRIC REDUCER, CL3000, SW, ASTM-A105, ASME B16.11	50	mm	25	mm	ASME B16.11	ASTM-A105	1	0/41	
CWR-25-D16A-ROD.108	CWR	D16A	SOCKOLET, CL3000, SW, ASTM-A105, ASME B16.11	50	mm	15	mm	ASME B16.11	ASTM-A105	1	0/14	
CWR-25-D16A-ROD.108	CWR	D16A	WELDING NECK FLANGE, RFFE/WN, PN 16, S235JRG2/1,0432/A105, DIN EN 1092-1	25	mm	25	mm	DIN EN 1092-1	S235JRG2/1,0432/A105	1	1/14	
CWR-25-D16A-ROD.108	CWR	D16A	WELDING NECK FLANGE, RFFE/WN, PN 16, S235JRG2/1,0432/A105, DIN EN 1092-1	25	mm	25	mm	DIN EN 1092-1	S235JRG2/1,0432/A105	1	1/14	
CWR-25-D16A-ROD.112	CWR	D16A	WELDING NECK FLANGE, RFFE/WN, PN 16, S235JRG2/1,0432/A105, DIN EN 1092-1	25	mm	25	mm	DIN EN 1092-1	S235JRG2/1,0432/A105	1	1/14	
CWR-25-D16A-ROD.112	CWR	D16A	WELDING NECK FLANGE, RFFE/WN, PN 16, S235JRG2/1,0432/A105, DIN EN 1092-1	25	mm	25	mm	DIN EN 1092-1	S235JRG2/1,0432/A105	1	1/14	
CWR-25-D16A-ROD.112	CWR	D16A	NIPPLE, MTE/PE, 4 MM, PE/THD (DIN 2999), DIN EN 10255, P235GH/1.0305/A106, L=100MM	15	mm	15	mm	DIN EN 10255	P235GH/1.0305/A106	1	0/01	
CWR-25-D16A-ROD.112	CWR	D16A	UNION NUT, CL3000, SW, ASTM-A105, ASME B16.11	25	mm	25	mm	ASME B16.11	ASTM-A105	1	0/66	
CWR-25-D16A-ROD.112	CWR	D16A	CONCENTRIC REDUCER, BW, P235GH/1.0305/A106, DIN EN 10253-1	100	mm	50	mm	DIN EN 10253-1	P235GH/1.0305/A106	1	1/6	
CWR-25-D16A-ROD.112	CWR	D16A	CONCENTRIC REDUCER, CL3000, SW, ASTM-A105, ASME B16.11	50	mm	25	mm	ASME B16.11	ASTM-A105	1	0/41	
CWR-25-D16A-ROD.112	CWR	D16A	THREDOLET, CL3000, THD, ASTM-A105, ASME B16.11	100	mm	25	mm	ASME B16.11	ASTM-A105	1	0/27	
CWR-25-D16A-ROD.112	CWR	D16A	CONCENTRIC REDUCER, BW, P235GH/1.0305/A106, DIN EN 10253-1	100	mm	50	mm	DIN EN 10253-1	P235GH/1.0305/A106	1	1/6	
CWR-25-D16A-ROD.112	CWR	D16A	CONCENTRIC REDUCER, CL3000, SW, ASTM-A105, ASME B16.11	50	mm	25	mm	ASME B16.11	ASTM-A105	1	0/41	
CWR-25-D16A-ROD.112	CWR	D16A	SOCKOLET, CL3000, SW, ASTM-A105, ASME B16.11	25	mm	15	mm	ASME B16.11	ASTM-A105	1	0/14	
CWR-25-D16A-ROD.112	CWR	D16A	CONCENTRIC REDUCER, CL3000, SW, ASTM-A105, ASME B16.11	32	mm	25	mm	ASME B16.11	ASTM-A105	1	0/17	
CWR-25-D16A-ROD.112	CWR	D16A	90 DEG ELBOW, CL 3000, SW, ASTM A105, ASME B16.11	25	mm	25	mm	ASME B16.11	ASTM A105	1	0/52	
CWR-25-D16A-ROD.112	CWR	D16A	90 DEG ELBOW, CL 3000, SW, ASTM A105, ASME B16.11	25	mm	25	mm	ASME B16.11	ASTM A105	1	0/52	
CWR-25-D16A-ROD.113	CWR	D16A	90 DEG ELBOW, CL 3000, SW, ASTM A105, ASME B16.11	25	mm	25	mm	ASME B16.11	ASTM A105	1	0/52	
CWR-25-D16A-ROD.113	CWR	D16A	WELDING NECK FLANGE, RFFE/WN, PN 16, S235JRG2/1,0432/A105, DIN EN 1092-1	25	mm	25	mm	DIN EN 1092-1	S235JRG2/1,0432/A105	1	1/14	
CWR-25-D16A-ROD.117	CWR	D16A	THREDOLET, CL3000, THD, ASTM-A105, ASME B16.11	100	mm	25	mm	ASME B16.11	ASTM-A105	1	0/27	
CWR-25-D16A-ROD.117	CWR	D16A	CONCENTRIC REDUCER, CL3000, SW, ASTM-A105, ASME B16.11	50	mm	25	mm	ASME B16.11	ASTM-A105	1	0/41	
CWR-25-D16A-ROD.117	CWR	D16A	CONCENTRIC REDUCER, CL3000, SW, ASTM-A105, ASME B16.11	50	mm	25	mm	ASME B16.11	ASTM-A105	1	0/41	
CWR-25-D16A-ROD.117	CWR	D16A	CONCENTRIC REDUCER, BW, P235GH/1.0305/A106, DIN EN 10253-1	100	mm	50	mm	DIN EN 10253-1	P235GH/1.0305/A106	1	1/6	
CWR-25-D16A-ROD.117	CWR	D16A	90 DEG ELBOW, CL 3000, SW, ASTM A105, ASME B16.11	25	mm	25	mm	ASME B16.11	ASTM A105	1	0/52	
CWR-25-D16A-ROD.117	CWR	D16A	UNION NUT, CL3000, SW, ASTM-A105, ASME B16.11	25	mm	25	mm	ASME B16.11	ASTM-A105	1	0/66	
CWR-25-D16A-ROD.117	CWR	D16A	CONCENTRIC REDUCER, BW, P235GH/1.0305/A106, DIN EN 10253-1	100	mm	50	mm	DIN EN 10253-1	P235GH/1.0305/A106	1	1/6	
CWR-25-D16A-ROD.117	CWR	D16A	WELDING NECK FLANGE, RFFE/WN, PN 16, S235JRG2/1,0432/A105, DIN EN 1092-1	25	mm	25	mm	DIN EN 1092-1	S235JRG2/1,0432/A105	1	1/14	
CWR-25-D16A-ROD.117	CWR	D16A	WELDING NECK FLANGE, RFFE/WN, PN 16, S235JRG2/1,0432/A105, DIN EN 1092-1	25	mm	25	mm	DIN EN 1092-1	S235JRG2/1,0432/A105	1	1/14	
CWR-25-D16A-ROD.117	CWR	D16A	NIPPLE, MTE/PE, 4 MM, PE/THD (DIN 2999), DIN EN 10255, P235GH/1.0305/A106, L=100MM	15	mm	15	mm	DIN EN 10255	P235GH/1.0305/A106	1	0/01	
CWR-25-D16A-ROD.117	CWR	D16A	SOCKOLET, CL3000, SW, ASTM-A105, ASME B16.11	25	mm	15	mm	ASME B16.11	ASTM-A105	1	0/14	
CWR-25-D16A-ROD.117	CWR	D16A	90 DEG ELBOW, CL 3000, SW, ASTM A105, ASME B16.11	25	mm	25	mm	ASME B16.11	ASTM A105	1	0/52	
CWR-25-D16A-ROD.117	CWR	D16A	90 DEG ELBOW, CL 3000, SW, ASTM A105, ASME B16.11	25	mm	25	mm	ASME B16.11	ASTM A105	1	0/52	
CWR-32-D16A-ROD.104	CWR	D16A	SOCKOLET, CL3000, SW, ASTM-A105, ASME B16.11	200	mm	32	mm	ASME B16.11	ASTM-A105	1	0/39	
CWR-32-D16A-ROD.104	CWR	D16A	CONCENTRIC REDUCER, BW, P235GH/1.0305/A106, DIN EN 10253-1	100	mm	65	mm	DIN EN 10253-1	P235GH/1.0305/A106	1	1/6	
CWR-32-D16A-ROD.104	CWR	D16A	SOCKOLET, CL3000, SW, ASTM-A105, ASME B16.11	32	mm	15	mm	ASME B16.11	ASTM-A105	1	0/14	
CWR-32-D16A-ROD.104	CWR	D16A	CONCENTRIC REDUCER, BW, P235GH/1.0305/A106, DIN EN 10253-1	100	mm	65	mm	DIN EN 10253-1	P235GH/1.0305/A106	1	1/6	
CWR-32-D16A-ROD.104	CWR	D16A	WELDING NECK FLANGE, RFFE/WN, PN 16, S235JRG2/1,0432/A105, DIN EN 1092-1	32	mm	32	mm	DIN EN 1092-1	S235JRG2/1,0432/A105	1	1/69	
CWR-32-D16A-ROD.104	CWR	D16A	CONCENTRIC REDUCER, BW, P235GH/1.0305/A106, DIN EN 10253-1	65	mm	32	mm	DIN EN 10253-1	P235GH/1.0305/A106	1	0/7	
CWR-32-D16A-ROD.104	CWR	D16A	CONCENTRIC REDUCER, BW, P235GH/1.0305/A106, DIN EN 10253-1	65	mm	32	mm	DIN EN 10253-1	P235GH/1.0305/A106	1	0/7	
CWR-32-D16A-ROD.104	CWR	D16A	THREDOLET, CL3000, THD, ASTM-A105, ASME B16.11	100	mm	25	mm	ASME B16.11	ASTM-A105	1	0/27	
CWR-32-D16A-ROD.115	CWR	D16A	SOCKOLET, CL3000, SW, ASTM-A105, ASME B16.11	200	mm	32	mm	ASME B16.11	ASTM-A105	1	0/39	
CWR-32-D16A-ROD.115	CWR	D16A	90 DEG ELBOW, CL 3000, SW, ASTM A105, ASME B16.11	32	mm	32	mm	ASME B16.11	ASTM A105	1	0/86	
CWR-32-D16A-ROD.115	CWR	D16A	90 DEG ELBOW, CL 3000, SW, ASTM A105, ASME B16.11	32	mm	32	mm	ASME B16.11	ASTM A105	1	0/86	
CWR-32-D16A-ROD.121	CWR	D16A	CONCENTRIC REDUCER, CL3000, SW, ASTM-A105, ASME B16.11	50	mm	32	mm	ASME B16.11	ASTM-A105	1	0/41	
CWR-32-D16A-ROD.121	CWR	D16A	90 DEG ELBOW, CL 3000, SW, ASTM A105, ASME B16.11	32	mm	32	mm	ASME B16.11	ASTM A105	1	0/86	
CWR-32-D16A-ROD.121	CWR	D16A	CONCENTRIC REDUCER, BW, P235GH/1.0305/A106, DIN EN 10253-1	100	mm	65	mm	DIN EN 10253-1	P235GH/1.0305/A106	1	1/6	
CWR-32-D16A-ROD.121	CWR	D16A	THREDOLET, CL3000, THD, ASTM-A105, ASME B16.11	100	mm	25	mm	ASME B16.11	ASTM-A105	1	0/27	
CWR-32-D16A-ROD.121	CWR	D16A	CONCENTRIC REDUCER, BW, P235GH/1.0305/A106, DIN EN 10253-1	65	mm	32	mm	DIN EN 10253-1	P235GH/1.0305/A106	1	0/7	
CWR-32-D16A-ROD.121	CWR	D16A	WELDING NECK FLANGE, RFFE/WN, PN 16, S235JRG2/1,0432/A105, DIN EN 1092-1	32	mm	32	mm	DIN EN 1092-1	S235JRG2/1,0432/A105	1	1/69	
CWR-32-D16A-ROD.121	CWR	D16A	WELDING NECK FLANGE, RFFE/WN, PN 16, S235JRG2/1,0432/A105, DIN EN 1092-1	32	mm	32	mm	DIN EN 1092-1	S235JRG2/1,0432/A105	1	1/69	
CWR-32-D16A-ROD.121	CWR	D16A	CONCENTRIC REDUCER, BW, P235GH/1.0305/A106, DIN EN 10253-1	100	mm	65	mm	DIN EN 10253-1	P235GH/1.0305/A106	1	1/6	
CWR-32-D16A-ROD.121	CWR	D16A	CONCENTRIC REDUCER, BW, P235GH/1.0305/A106, DIN EN 10253-1	65	mm	32	mm	DIN EN 10253-1	P235GH/1.0305/A106	1	0/7	
CWR-32-D16A-ROD.121	CWR	D16A	WELDING NECK FLANGE, RFFE/WN, PN 16, S235JRG2/1,0432/A105, DIN EN 1092-1	32	mm	32	mm	DIN EN 1092-1	S235JRG2/1,0432/A105	1	1/69	
CWR-32-D16A-ROD.121	CWR	D16A	SOCKOLET, CL3000, SW, ASTM-A105, ASME B16.11	32	mm	15	mm	ASME B16.11	ASTM-A105	1	0/14	
CWR-32-D16A-ROD.121	CWR	D16A	NIPPLE, MTE/PE, 4 MM, PE/THD (DIN 2999), DIN EN 10255, P235GH/1.0305/A106, L=100MM	15	mm	15	mm	DIN EN 10255	P235GH/1.0305/A106	1	0/01	
CWR-65-D16A-ROD.122	CWR	D16A	WELDING NECK FLANGE, RFFE/WN, PN 16, S235JRG2/1,0432/A105, DIN EN 1092-1	65	mm	65	mm	DIN EN 1092-1	S235JRG2/1,0432/A105	1	3/06	

PIPE TAG	FLUID	SPECI.	TYPE	DN	UNITS	DN	UNITS	NORMATIVE	MATERIAL	QUANT.	HEIGHT	PRICE
CWR-65-D16A-ROD.122	CWR	D16A	90 DEG ELBOW, CL 3000, SW, ASTM A105, ASME B16.11	25	mm	25	mm	ASME B16.11	ASTM A105	1	0/52	
CWR-65-D16A-ROD.122	CWR	D16A	THREDOLET, CL3000, THD, ASTM-A105, ASME B16.11	100	mm	25	mm	ASME B16.11	ASTM-A105	1	0/27	
CWR-65-D16A-ROD.122	CWR	D16A	THREDOLET, CL3000, THD, ASTM-A105, ASME B16.11	65	mm	25	mm	ASME B16.11	ASTM-A105	1	0/27	
CWR-65-D16A-ROD.122	CWR	D16A	CONCENTRIC REDUCER, BW, P235GH/1.0305/A106, DIN EN 10253-1	100	mm	65	mm	DIN EN 10253-1	P235GH/1.0305/A106	1	1/6	
CWR-65-D16A-ROD.122	CWR	D16A	SOCKOLET, CL3000, SW, ASTM-A105, ASME B16.11	65	mm	15	mm	ASME B16.11	ASTM-A105	1	0/14	
CWR-65-D16A-ROD.122	CWR	D16A	NIPPLE, MTE/PE, 4 MM, PE/THD (DIN 2999), DIN EN 10255, P235GH/1.0305/A106, L=100MM	15	mm	15	mm	DIN EN 10255	P235GH/1.0305/A106	1	0/01	
CWR-65-D16A-ROD.122	CWR	D16A	WELDING NECK FLANGE, RFFE/WN, PN 16, S235JRG2/1,0432/A105, DIN EN 1092-1	65	mm	65	mm	DIN EN 1092-1	S235JRG2/1,0432/A105	1	3/06	
CWR-65-D16A-ROD.122	CWR	D16A	WELDING NECK FLANGE, RFFE/WN, PN 16, S235JRG2/1,0432/A105, DIN EN 1092-1	65	mm	65	mm	DIN EN 1092-1	S235JRG2/1,0432/A105	1	3/06	
CWR-65-D16A-ROD.122	CWR	D16A	CONCENTRIC REDUCER, BW, P235GH/1.0305/A106, DIN EN 10253-1	100	mm	65	mm	DIN EN 10253-1	P235GH/1.0305/A106	1	1/6	
CWR-65-D16A-ROD.122	CWR	D16A	SOCKOLET, CL3000, SW, ASTM-A105, ASME B16.11	40	mm	15	mm	ASME B16.11	ASTM-A105	1	0/14	
CWR-65-D16A-ROD.122	CWR	D16A	CONCENTRIC REDUCER, BW, P235GH/1.0305/A106, DIN EN 10253-1	100	mm	65	mm	DIN EN 10253-1	P235GH/1.0305/A106	1	1/6	
CWR-65-D16A-ROD.122	CWR	D16A	WELDING NECK FLANGE, RFFE/WN, PN 16, S235JRG2/1,0432/A105, DIN EN 1092-1	25	mm	25	mm	DIN EN 1092-1	S235JRG2/1,0432/A105	1	1/14	
CWR-40-D16A-ROD.123	CWR	D16A	CONCENTRIC REDUCER, BW, P235GH/1.0305/A106, DIN EN 10253-1	65	mm	40	mm	DIN EN 10253-1	P235GH/1.0305/A106	1	0/7	
CWR-40-D16A-ROD.123	CWR	D16A	SOCKOLET, CL3000, SW, ASTM-A105, ASME B16.11	40	mm	15	mm	ASME B16.11	ASTM-A105	1	0/14	
CWR-40-D16A-ROD.123	CWR	D16A	90 DEG ELBOW, CL 3000, SW, ASTM A105, ASME B16.11	25	mm	25	mm	ASME B16.11	ASTM A105	1	0/52	
CWR-40-D16A-ROD.123	CWR	D16A	90 DEG ELBOW, CL 3000, SW, ASTM A105, ASME B16.11	40	mm	40	mm	ASME B16.11	ASTM A105	1	1/09	
CWR-40-D16A-ROD.123	CWR	D16A	CONCENTRIC REDUCER, BW, P235GH/1.0305/A106, DIN EN 10253-1	100	mm	65	mm	DIN EN 10253-1	P235GH/1.0305/A106	1	1/6	
CWR-40-D16A-ROD.123	CWR	D16A	NIPPLE, MTE/PE, 4 MM, PE/THD (DIN 2999), DIN EN 10255, P235GH/1.0305/A106, L=100MM	15	mm	15	mm	DIN EN 10255	P235GH/1.0305/A106	1	0/01	
CWR-40-D16A-ROD.123	CWR	D16A	WELDING NECK FLANGE, RFFE/WN, PN 16, S235JRG2/1,0432/A105, DIN EN 1092-1	25	mm	25	mm	DIN EN 1092-1	S235JRG2/1,0432/A105	1	1/14	
CWR-40-D16A-ROD.123	CWR	D16A	90 DEG ELBOW, CL 3000, SW, ASTM A105, ASME B16.11	40	mm	40	mm	ASME B16.11	ASTM A105	1	1/09	
CWR-40-D16A-ROD.123	CWR	D16A	90 DEG ELBOW, CL 3000, SW, ASTM A105, ASME B16.11	40	mm	40	mm	ASME B16.11	ASTM A105	1	1/09	
CWR-40-D16A-ROD.123	CWR	D16A	WELDING NECK FLANGE, RFFE/WN, PN 16, S235JRG2/1,0432/A105, DIN EN 1092-1	40	mm	40	mm	DIN EN 1092-1	S235JRG2/1,0432/A105	1	1/86	
CWR-40-D16A-ROD.123	CWR	D16A	WELDING NECK FLANGE, RFFE/WN, PN 16, S235JRG2/1,0432/A105, DIN EN 1092-1	40	mm	40	mm	DIN EN 1092-1	S235JRG2/1,0432/A105	1	1/86	
CWR-40-D16A-ROD.123	CWR	D16A	REDUCING BRANCH TEE, CL3000, SW, ASTM-A105, ASME B16.11	40	mm	25	mm	ASME B16.11	ASTM-A105	1	1/35	
CWR-40-D16A-ROD.123	CWR	D16A	WELDING NECK FLANGE, RFFE/WN, PN 16, S235JRG2/1,0432/A105, DIN EN 1092-1	40	mm	40	mm	DIN EN 1092-1	S235JRG2/1,0432/A105	1	1/86	
CWR-40-D16A-ROD.123	CWR	D16A	CONCENTRIC REDUCER, BW, P235GH/1.0305/A106, DIN EN 10253-1	65	mm	40	mm	DIN EN 10253-1	P235GH/1.0305/A106	1	0/7	
CWR-40-D16A-ROD.123	CWR	D16A	CONCENTRIC REDUCER, BW, P235GH/1.0305/A106, DIN EN 10253-1	100	mm	65	mm	DIN EN 10253-1	P235GH/1.0305/A106	1	1/6	
CWR-40-D16A-ROD.123	CWR	D16A	THREDOLET, CL3000, THD, ASTM-A105, ASME B16.11	100	mm	25	mm	ASME B16.11	ASTM-A105	1	0/27	
CWR-40-D16A-ROD.123	CWR	D16A	90 DEG ELBOW, CL 3000, SW, ASTM A105, ASME B16.11	40	mm	40	mm	ASME B16.11	ASTM A105	1	1/09	
CWR-50-D16A-ROD.116	CWR	D16A	90 DEG ELBOW, CL 3000, SW, ASTM A105, ASME B16.11	50	mm	50	mm	ASME B16.11	ASTM A105	1	1/77	
CWR-50-D16A-ROD.116	CWR	D16A	90 DEG ELBOW, CL 3000, SW, ASTM A105, ASME B16.11	50	mm	50	mm	ASME B16.11	ASTM A105	1	1/77	
CWR-65-D16A-ROD.124	CWR	D16A	ECCENTRIC REDUCER, BW, P235GH/1.0305/A106, DIN EN 10253-1	65	mm	40	mm	DIN EN 10253-1	P235GH/1.0305/A106	1	0/7	
CWR-65-D16A-ROD.124	CWR	D16A	90 DEG ELBOW, 3D, BW, P235GH/1.0305/A106, DIN EN 10253-1	65	mm	65	mm	DIN EN 10253-1	P235GH/1.0305/A106	1	0/79	
CWR-65-D16A-ROD.124	CWR	D16A	90 DEG ELBOW, 3D, BW, P235GH/1.0305/A106, DIN EN 10253-1	65	mm	65	mm	DIN EN 10253-1	P235GH/1.0305/A106	1	0/79	
CWR-65-D16A-ROD.124	CWR	D16A	90 DEG ELBOW, 3D, BW, P235GH/1.0305/A106, DIN EN 10253-1	65	mm	65	mm	DIN EN 10253-1	P235GH/1.0305/A106	1	0/79	
CWR-65-D16A-ROD.124	CWR	D16A	45 DEG ELBOW, 3D, BW, P235GH/1.0305/A106, DIN EN 10253-1	65	mm	65	mm	DIN EN 10253-1	P235GH/1.0305/A106	1	0/395	
CWR-65-D16A-ROD.124	CWR	D16A	REDUCING BRANCH TEE, BW, P235GH/1.0305/A106, DIN EN 10253-1	65	mm	40	mm	DIN EN 10253-1	P235GH/1.0305/A106	1	1/68	
CWR-65-D16A-ROD.124	CWR	D16A	90 DEG ELBOW, 3D, BW, P235GH/1.0305/A106, DIN EN 10253-1	65	mm	65	mm	DIN EN 10253-1	P235GH/1.0305/A106	1	0/79	
CWR-65-D16A-ROD.124	CWR	D16A	90 DEG ELBOW, 3D, BW, P235GH/1.0305/A106, DIN EN 10253-1	65	mm	65	mm	DIN EN 10253-1	P235GH/1.0305/A106	1	0/79	
CWR-65-D16A-ROD.124	CWR	D16A	90 DEG ELBOW, 3D, BW, P235GH/1.0305/A106, DIN EN 10253-1	65	mm	65	mm	DIN EN 10253-1	P235GH/1.0305/A106	1	0/79	
CWR-65-D16A-ROD.124	CWR	D16A	90 DEG ELBOW, 3D, BW, P235GH/1.0305/A106, DIN EN 10253-1	65	mm	65	mm	DIN EN 10253-1	P235GH/1.0305/A106	1	0/79	
CWR-65-D16A-ROD.124	CWR	D16A	90 DEG ELBOW, 3D, BW, P235GH/1.0305/A106, DIN EN 10253-1	65	mm	65	mm	DIN EN 10253-1	P235GH/1.0305/A106	1	0/79	
CWR-65-D16A-ROD.124	CWR	D16A	90 DEG ELBOW, 3D, BW, P235GH/1.0305/A106, DIN EN 10253-1	65	mm	65	mm	DIN EN 10253-1	P235GH/1.0305/A106	1	0/79	
CWR-80-D16A-ROD.105	CWR	D16A	THREDOLET, CL3000, THD, ASTM-A105, ASME B16.11	80	mm	15	mm	ASME B16.11	ASTM-A105	1	0/14	
CWR-80-D16A-ROD.105	CWR	D16A	45 DEG ELBOW, 3D, BW, P235GH/1.0305/A106, DIN EN 10253-1	80	mm	80	mm	DIN EN 10253-1	P235GH/1.0305/A106	1	0/61	
CWR-80-D16A-ROD.105	CWR	D16A	45 DEG ELBOW, 3D, BW, P235GH/1.0305/A106, DIN EN 10253-1	80	mm	80	mm	DIN EN 10253-1	P235GH/1.0305/A106	1	0/61	
CWR-80-D16A-ROD.105	CWR	D16A	THREDOLET, CL3000, THD, ASTM-A105, ASME B16.11	80	mm	15	mm	ASME B16.11	ASTM-A105	1	0/14	
CWR-80-D16A-ROD.105	CWR	D16A	90 DEG ELBOW, 3D, BW, P235GH/1.0305/A106, DIN EN 10253-1	80	mm	80	mm	DIN EN 10253-1	P235GH/1.0305/A106	1	1/22	
CWR-80-D16A-ROD.105	CWR	D16A	PLAIN FLANGE,, FFFE/WN, PN 16, S235JRG2/1,0432/A105, DIN EN 1092-1	80	mm	80	mm	DIN EN 1092-1	S235JRG2/1,0432/A105	1	3/7	
CWR-80-D16A-ROD.105	CWR	D16A	NIPPLE, MTE/PE, 4 MM, PE/THD (DIN 2999), DIN EN 10255, P235GH/1.0305/A106, L=100MM	15	mm	15	mm	DIN EN 10255	P235GH/1.0305/A106	1	0/01	
CWR-80-D16A-ROD.105	CWR	D16A	PLAIN FLANGE,, FFFE/WN, PN 16, S235JRG2/1,0432/A105, DIN EN 1092-1	80	mm	80	mm	DIN EN 1092-1	S235JRG2/1,0432/A105	1	3/7	
CWR-80-D16A-ROD.105	CWR	D16A	90 DEG ELBOW, 3D, BW, P235GH/1.0305/A106, DIN EN 10253-1	80	mm	80	mm	DIN EN 10253-1	P235GH/1.0305/A106	1	1/22	
CWR-80-D16A-ROD.105	CWR	D16A	THREDOLET, CL3000, THD, ASTM-A105, ASME B16.11	80	mm	25	mm	ASME B16.11	ASTM-A105	1	0/27	
CWR-80-D16A-ROD.105	CWR	D16A	SOCKOLET, CL3000, SW, ASTM-A105, ASME B16.11	80	mm	15	mm	ASME B16.11	ASTM-A105	1	0/14	
CWR-80-D16A-ROD.105	CWR	D16A	WELDING NECK FLANGE,, RFFE/WN, PN 16, S235JRG2/1,0432/A105, DIN EN 1092-1	80	mm	80	mm	DIN EN 1092-1	S235JRG2/1,0432/A105	1	3/7	
CWR-80-D16A-ROD.105	CWR	D16A	WELDING NECK FLANGE,, RFFE/WN, PN 16, S235JRG2/1,0432/A105, DIN EN 1092-1	80	mm	80	mm	DIN EN 1092-1	S235JRG2/1,0432/A105	1	3/7	
CWR-80-D16A-ROD.105	CWR	D16A	PLAIN FLANGE,, FFFE/WN, PN 16, S235JRG2/1,0432/A105, DIN EN 1092-1	80	mm	80	mm	DIN EN 1092-1	S235JRG2/1,0432/A105	1	3/7	
CWR-80-D16A-ROD.105	CWR	D16A	PLAIN FLANGE,, FFFE/WN, PN 16, S235JRG2/1,0432/A105, DIN EN 1092-1	80	mm	80	mm	DIN EN 1092-1	S235JRG2/1,0432/A105	1	3/7	
CWR-80-D16A-ROD.105	CWR	D16A	TEE,BW, P235GH/1.0305/A106, DIN EN 10253-1	80	mm	80	mm	DIN EN 10253-1	P235GH/1.0305/A106	1	3/401942775	
CWR-80-D16A-ROD.105	CWR	D16A	WELDING NECK FLANGE,, RFFE/WN, PN 16, S235JRG2/1,0432/A105, DIN EN 1092-1	80	mm	80	mm	DIN EN 1092-1	S235JRG2/1,0432/A105	1	3/7	
CWR-80-D16A-ROD.105	CWR	D16A	PLAIN FLANGE,, FFFE/WN, PN 16, S235JRG2/1,0432/A105, DIN EN 1092-1	80	mm	80	mm	DIN EN 1092-1	S235JRG2/1,0432/A105	1	3/7	
CWR-80-D16A-ROD.105	CWR	D16A	PLAIN FLANGE,, FFFE/WN, PN 16, S235JRG2/1,0432/A105, DIN EN 1092-1	80	mm	80	mm	DIN EN 1092-1	S235JRG2/1,0432/A105	1	3/7	
CWR-80-D16A-ROD.105	CWR	D16A	90 DEG ELBOW, 3D, BW, P235GH/1.0305/A106, DIN EN 10253-1	80	mm	80	mm	DIN EN 10253-1	P235GH/1.0305/A106	1	1/22	
CWR-80-D16A-ROD.105	CWR	D16A	WELDING NECK FLANGE,, RFFE/WN, PN 16, S235JRG2/1,0432/A105, DIN EN 1092-1	80	mm	80	mm	DIN EN 1092-1	S235JRG2/1,0432/A105	1	3/7	
CWS-150-D16A-ROD.109	CWS	D16A	SOCKOLET, CL3000, SW, ASTM-A105, ASME B16.11	150	mm	15	mm	ASME B16.11	ASTM-A105	1	0/14	
CWS-150-D16A-ROD.109	CWS	D16A	PLAIN FLANGE, FFFE/WN, PN 16, S235JRG2/1,0432/A105, DIN EN 1092-1	150	mm	150	mm	DIN EN 1092-1	S235JRG2/1,0432/A105	1	7/75	
CWS-150-D16A-ROD.109	CWS	D16A	NIPPLE, MTE/PE, 4 MM, PE/THD (DIN 2999), DIN EN 10255, P235GH/1.0305/A106, L=100MM	15	mm	15	mm	DIN EN 10255	P235GH/1.0305/A106	1	0/01	

PIPE TAG	FLUID	SPECI.	TYPE	DN	UNITS	DN	UNITS	NORMATIVE	MATERIAL	QUANT.	HEIGHT	PRICE
CWS-150-D16A-ROD.109	CWS	D16A	WELDING NECK FLANGE, RFFE/WN, PN 16, S235JRG2/1,0432/A105, DIN EN 1092-1	150	mm	150	mm	DIN EN 1092-1	S235JRG2/1,0432/A105	1	7/75	
CWS-150-D16A-ROD.109	CWS	D16A	PLAIN FLANGE, FFFE/WN, PN 16, S235JRG2/1,0432/A105, DIN EN 1092-1	150	mm	150	mm	DIN EN 1092-1	S235JRG2/1,0432/A105	1	7/75	
CWS-200-D16A-ROD.10	CWS	D16A	90 DEG ELBOW, 3D, BW, P235GH/1.0305/A106, DIN EN 10253-1	200	mm	200	mm	DIN EN 10253-1	P235GH/1.0305/A106	1	15/8	
CWS-200-D16A-ROD.10	CWS	D16A	SOCKOLET, CL3000, SW, ASTM-A105, ASME B16.11	200	mm	15	mm	ASME B16.11	ASTM-A105	1	0/14	
CWS-200-D16A-ROD.10	CWS	D16A	90 DEG ELBOW, 3D, BW, P235GH/1.0305/A106, DIN EN 10253-1	200	mm	200	mm	DIN EN 10253-1	P235GH/1.0305/A106	1	15/8	
CWS-200-D16A-ROD.10	CWS	D16A	90 DEG ELBOW, 3D, BW, P235GH/1.0305/A106, DIN EN 10253-1	200	mm	200	mm	DIN EN 10253-1	P235GH/1.0305/A106	1	15/8	
CWS-200-D16A-ROD.10	CWS	D16A	SOCKOLET, CL3000, SW, ASTM-A105, ASME B16.11	200	mm	15	mm	ASME B16.11	ASTM-A105	1	0/14	
CWS-200-D16A-ROD.10	CWS	D16A	PLAIN FLANGE, FFFE/WN, PN 16, S235JRG2/1,0432/A105, DIN EN 1092-1	200	mm	200	mm	DIN EN 1092-1	S235JRG2/1,0432/A105	1	9/85	
CWS-200-D16A-ROD.10	CWS	D16A	PLAIN FLANGE, FFFE/WN, PN 16, S235JRG2/1,0432/A105, DIN EN 1092-1	200	mm	200	mm	DIN EN 1092-1	S235JRG2/1,0432/A105	1	9/85	
CWS-200-D16A-ROD.10	CWS	D16A	NIPPLE, MTE/PE, 4 MM, PE/THD (DIN 2999), DIN EN 10255, P235GH/1.0305/A106, L=100MM	15	mm	15	mm	DIN EN 10255	P235GH/1.0305/A106	1	0/01	
CWS-200-D16A-ROD.10	CWS	D16A	90 DEG ELBOW, 3D, BW, P235GH/1.0305/A106, DIN EN 10253-1	200	mm	200	mm	DIN EN 10253-1	P235GH/1.0305/A106	1	15/8	
CWS-200-D16A-ROD.10	CWS	D16A	BLIND FLANGE, RFFE, PN 16, S235JRG2/1,0432/A105, DIN EN 1092-1	200	mm	0	mm	DIN EN 1092-1	S235JRG2/1,0432/A105	1	16/5	
CWS-200-D16A-ROD.10	CWS	D16A	REDUCING BRANCH TEE, BW, P235GH/1.0305/A106, DIN EN 10253-1	200	mm	150	mm	DIN EN 10253-1	P235GH/1.0305/A106	1	18/3	
CWS-200-D16A-ROD.10	CWS	D16A	WELDING NECK FLANGE, RFFE/WN, PN 16, S235JRG2/1,0432/A105, DIN EN 1092-1	200	mm	200	mm	DIN EN 1092-1	S235JRG2/1,0432/A105	1	11	
CWS-200-D16A-ROD.10	CWS	D16A	90 DEG ELBOW, 3D, BW, P235GH/1.0305/A106, DIN EN 10253-1	200	mm	200	mm	DIN EN 10253-1	P235GH/1.0305/A106	1	15/8	
CWS-200-D16A-ROD.10	CWS	D16A	90 DEG ELBOW, 3D, BW, P235GH/1.0305/A106, DIN EN 10253-1	200	mm	200	mm	DIN EN 10253-1	P235GH/1.0305/A106	1	15/8	
CWS-200-D16A-ROD.10	CWS	D16A	90 DEG ELBOW, 3D, BW, P235GH/1.0305/A106, DIN EN 10253-1	200	mm	200	mm	DIN EN 10253-1	P235GH/1.0305/A106	1	15/8	
CWS-200-D16A-ROD.10	CWS	D16A	90 DEG ELBOW, 3D, BW, P235GH/1.0305/A106, DIN EN 10253-1	200	mm	200	mm	DIN EN 10253-1	P235GH/1.0305/A106	1	15/8	
CWS-200-D16A-ROD.10	CWS	D16A	90 DEG ELBOW, 3D, BW, P235GH/1.0305/A106, DIN EN 10253-1	200	mm	200	mm	DIN EN 10253-1	P235GH/1.0305/A106	1	15/8	
CWS-200-D16A-ROD.10	CWS	D16A	90 DEG ELBOW, 3D, BW, P235GH/1.0305/A106, DIN EN 10253-1	200	mm	200	mm	DIN EN 10253-1	P235GH/1.0305/A106	1	15/8	
CWS-200-D16A-ROD.10	CWS	D16A	90 DEG ELBOW, 3D, BW, P235GH/1.0305/A106, DIN EN 10253-1	200	mm	200	mm	DIN EN 10253-1	P235GH/1.0305/A106	1	15/8	
CWS-200-D16A-ROD.10	CWS	D16A	90 DEG ELBOW, 3D, BW, P235GH/1.0305/A106, DIN EN 10253-1	200	mm	200	mm	DIN EN 10253-1	P235GH/1.0305/A106	1	15/8	
CWS-20-D16A-ROD.102	CWS	D16A	WELDING NECK FLANGE, RFFE/WN, PN 16, S235JRG2/1,0432/A105, DIN EN 1092-1	20	mm	20	mm	DIN EN 1092-1	S235JRG2/1,0432/A105	1	0/952	
CWS-20-D16A-ROD.103	CWS	D16A	WELDING NECK FLANGE, RFFE/WN, PN 16, S235JRG2/1,0432/A105, DIN EN 1092-1	20	mm	20	mm	DIN EN 1092-1	S235JRG2/1,0432/A105	1	0/952	
CWS-20-D16A-ROD.106	CWS	D16A	90 DEG ELBOW, CL 3000, SW, ASTM A105, ASME B16.11	20	mm	20	mm	ASME B16.11	ASTM A105	1	0/32	
CWS-20-D16A-ROD.106	CWS	D16A	TEE, CL 3000, SW, ASTM-A105, ASME B16.11	20	mm	20	mm	ASME B16.11	ASTM A105	1	0/38	
CWS-20-D16A-ROD.106	CWS	D16A	WELDING NECK FLANGE, RFFE/WN, PN 16, S235JRG2/1,0432/A105, DIN EN 1092-1	20	mm	20	mm	DIN EN 1092-1	S235JRG2/1,0432/A105	1	0/952	
CWS-20-D16A-ROD.106	CWS	D16A	SOCKOLET, CL3000, SW, ASTM-A105, ASME B16.11	200	mm	20	mm	ASME B16.11	ASTM-A105	1	0/15	
CWS-20-D16A-ROD.106	CWS	D16A	90 DEG ELBOW, CL 3000, SW, ASTM A105, ASME B16.11	20	mm	20	mm	ASME B16.11	ASTM A105	1	0/32	
CWS-20-D16A-ROD.106	CWS	D16A	90 DEG ELBOW, CL 3000, SW, ASTM A105, ASME B16.11	20	mm	20	mm	ASME B16.11	ASTM A105	1	0/32	
CWS-20-D16A-ROD.106	CWS	D16A	90 DEG ELBOW, CL 3000, SW, ASTM A105, ASME B16.11	20	mm	20	mm	ASME B16.11	ASTM A105	1	0/32	
CWS-20-D16A-ROD.106	CWS	D16A	90 DEG ELBOW, CL 3000, SW, ASTM A105, ASME B16.11	20	mm	20	mm	ASME B16.11	ASTM A105	1	0/32	
CWS-20-D16A-ROD.107	CWS	D16A	WELDING NECK FLANGE, RFFE/WN, PN 16, S235JRG2/1,0432/A105, DIN EN 1092-1	20	mm	20	mm	DIN EN 1092-1	S235JRG2/1,0432/A105	1	0/952	
CWS-20-D16A-ROD.114	CWS	D16A	WELDING NECK FLANGE, RFFE/WN, PN 16, S235JRG2/1,0432/A105, DIN EN 1092-1	20	mm	20	mm	DIN EN 1092-1	S235JRG2/1,0432/A105	1	0/952	
CWS-20-D16A-ROD.114	CWS	D16A	CONCENTRIC REDUCER, CL3000, SW, ASTM-A105, ASME B16.11	25	mm	20	mm	ASME B16.11	ASTM-A105	1	0/13	
CWS-20-D16A-ROD.118	CWS	D16A	WELDING NECK FLANGE, RFFE/WN, PN 16, S235JRG2/1,0432/A105, DIN EN 1092-1	20	mm	20	mm	DIN EN 1092-1	S235JRG2/1,0432/A105	1	0/952	
CWS-20-D16A-ROD.119	CWS	D16A	WELDING NECK FLANGE, RFFE/WN, PN 16, S235JRG2/1,0432/A105, DIN EN 1092-1	20	mm	20	mm	DIN EN 1092-1	S235JRG2/1,0432/A105	1	0/952	
CWS-25-D16A-ROD.108	CWS	D16A	UNION NUT, CL3000, SW, ASTM-A105, ASME B16.11	25	mm	25	mm	ASME B16.11	ASTM-A105	1	0/66	
CWS-25-D16A-ROD.108	CWS	D16A	90 DEG ELBOW, CL 3000, SW, ASTM A105, ASME B16.11	25	mm	25	mm	ASME B16.11	ASTM A105	1	0/52	
CWS-25-D16A-ROD.108	CWS	D16A	90 DEG ELBOW, CL 3000, SW, ASTM A105, ASME B16.11	25	mm	25	mm	ASME B16.11	ASTM A105	1	0/52	
CWS-25-D16A-ROD.108	CWS	D16A	90 DEG ELBOW, CL 3000, SW, ASTM A105, ASME B16.11	25	mm	25	mm	ASME B16.11	ASTM A105	1	0/52	
CWS-25-D16A-ROD.108	CWS	D16A	90 DEG ELBOW, CL 3000, SW, ASTM A105, ASME B16.11	25	mm	25	mm	ASME B16.11	ASTM A105	1	0/52	
CWS-25-D16A-ROD.108	CWS	D16A	90 DEG ELBOW, CL 3000, SW, ASTM A105, ASME B16.11	25	mm	25	mm	ASME B16.11	ASTM A105	1	0/52	
CWS-25-D16A-ROD.108	CWS	D16A	90 DEG ELBOW, CL 3000, SW, ASTM A105, ASME B16.11	25	mm	25	mm	ASME B16.11	ASTM A105	1	0/52	
CWS-25-D16A-ROD.108	CWS	D16A	SOCKOLET, CL3000, SW, ASTM-A105, ASME B16.11	200	mm	25	mm	ASME B16.11	ASTM-A105	1	0/27	
CWS-25-D16A-ROD.108	CWS	D16A	90 DEG ELBOW, CL 3000, SW, ASTM A105, ASME B16.11	25	mm	25	mm	ASME B16.11	ASTM A105	1	0/52	
CWS-25-D16A-ROD.108	CWS	D16A	SOCKOLET, CL3000, SW, ASTM-A105, ASME B16.11	25	mm	15	mm	ASME B16.11	ASTM-A105	1	0/14	
CWS-25-D16A-ROD.108	CWS	D16A	NIPPLE, MTE/PE, 4 MM, PE/THD (DIN 2999), DIN EN 10255, P235GH/1.0305/A106, L=100MM	15	mm	15	mm	DIN EN 10255	P235GH/1.0305/A106	1	0/01	
CWS-25-D16A-ROD.108	CWS	D16A	90 DEG ELBOW, CL 3000, SW, ASTM A105, ASME B16.11	25	mm	25	mm	ASME B16.11	ASTM A105	1	0/52	
CWS-25-D16A-ROD.108	CWS	D16A	90 DEG ELBOW, CL 3000, SW, ASTM A105, ASME B16.11	25	mm	25	mm	ASME B16.11	ASTM A105	1	0/52	
CWS-25-D16A-ROD.108	CWS	D16A	90 DEG ELBOW, CL 3000, SW, ASTM A105, ASME B16.11	25	mm	25	mm	ASME B16.11	ASTM A105	1	0/52	
CWS-25-D16A-ROD.108	CWS	D16A	90 DEG ELBOW, CL 3000, SW, ASTM A105, ASME B16.11	25	mm	25	mm	ASME B16.11	ASTM A105	1	0/52	
CWS-25-D16A-ROD.112	CWS	D16A	NIPPLE, MTE/PE, 4 MM, PE/THD (DIN 2999), DIN EN 10255, P235GH/1.0305/A106, L=100MM	15	mm	15	mm	DIN EN 10255	P235GH/1.0305/A106	1	0/01	
CWS-25-D16A-ROD.112	CWS	D16A	90 DEG ELBOW, CL 3000, SW, ASTM A105, ASME B16.11	25	mm	25	mm	ASME B16.11	ASTM A105	1	0/52	
CWS-25-D16A-ROD.112	CWS	D16A	90 DEG ELBOW, CL 3000, SW, ASTM A105, ASME B16.11	25	mm	25	mm	ASME B16.11	ASTM A105	1	0/52	
CWS-25-D16A-ROD.112	CWS	D16A	90 DEG ELBOW, CL 3000, SW, ASTM A105, ASME B16.11	25	mm	25	mm	ASME B16.11	ASTM A105	1	0/52	
CWS-25-D16A-ROD.112	CWS	D16A	UNION NUT, CL3000, SW, ASTM-A105, ASME B16.11	25	mm	25	mm	ASME B16.11	ASTM-A105	1	0/66	
CWS-25-D16A-ROD.112	CWS	D16A	90 DEG ELBOW, CL 3000, SW, ASTM A105, ASME B16.11	25	mm	25	mm	ASME B16.11	ASTM A105	1	0/52	
CWS-25-D16A-ROD.112	CWS	D16A	90 DEG ELBOW, CL 3000, SW, ASTM A105, ASME B16.11	25	mm	25	mm	ASME B16.11	ASTM A105	1	0/52	
CWS-25-D16A-ROD.112	CWS	D16A	SOCKOLET, CL3000, SW, ASTM-A105, ASME B16.11	200	mm	25	mm	ASME B16.11	ASTM-A105	1	0/27	
CWS-25-D16A-ROD.112	CWS	D16A	90 DEG ELBOW, CL 3000, SW, ASTM A105, ASME B16.11	25	mm	25	mm	ASME B16.11	ASTM A105	1	0/52	
CWS-25-D16A-ROD.112	CWS	D16A	90 DEG ELBOW, CL 3000, SW, ASTM A105, ASME B16.11	25	mm	25	mm	ASME B16.11	ASTM A105	1	0/52	
CWS-25-D16A-ROD.112	CWS	D16A	90 DEG ELBOW, CL 3000, SW, ASTM A105, ASME B16.11	25	mm	25	mm	ASME B16.11	ASTM A105	1	0/52	
CWS-25-D16A-ROD.112	CWS	D16A	SOCKOLET, CL3000, SW, ASTM-A105, ASME B16.11	25	mm	15	mm	ASME B16.11	ASTM-A105	1	0/14	
CWS-25-D16A-ROD.113	CWS	D16A	WELDING NECK FLANGE, RFFE/WN, PN 16, S235JRG2/1,0432/A105, DIN EN 1092-1	25	mm	25	mm	DIN EN 1092-1	S235JRG2/1,0432/A105	1	1/14	
CWS-25-D16A-ROD.117	CWS	D16A	NIPPLE, MTE/PE, 4 MM, PE/THD (DIN 2999), DIN EN 10255, P235GH/1.0305/A106, L=100MM	15	mm	15	mm	DIN EN 10255	P235GH/1.0305/A106	1	0/01	
CWS-25-D16A-ROD.117	CWS	D16A	90 DEG ELBOW, CL 3000, SW, ASTM A105, ASME B16.11	25	mm	25	mm	ASME B16.11	ASTM A105	1	0/52	
CWS-25-D16A-ROD.117	CWS	D16A	90 DEG ELBOW, CL 3000, SW, ASTM A105, ASME B16.11	25	mm	25	mm	ASME B16.11	ASTM A105	1	0/52	

PIPE TAG	FLUID	SPECI.	TYPE	DN	UNITS	DN	UNITS	NORMATIVE	MATERIAL	QUANT.	HEIGHT	PRICE
CWS-25-D16A-ROD.117	CWS	D16A	UNION NUT, CL3000, SW, ASTM-A105, ASME B16.11	25	mm	25	mm	ASME B16.11	ASTM-A105	1	0/66	
CWS-25-D16A-ROD.117	CWS	D16A	90 DEG ELBOW, CL 3000, SW, ASTM A105, ASME B16.11	25	mm	25	mm	ASME B16.11	ASTM A105	1	0/52	
CWS-25-D16A-ROD.117	CWS	D16A	90 DEG ELBOW, CL 3000, SW, ASTM A105, ASME B16.11	25	mm	25	mm	ASME B16.11	ASTM A105	1	0/52	
CWS-25-D16A-ROD.117	CWS	D16A	90 DEG ELBOW, CL 3000, SW, ASTM A105, ASME B16.11	25	mm	25	mm	ASME B16.11	ASTM A105	1	0/52	
CWS-25-D16A-ROD.117	CWS	D16A	SOCKOLET, CL3000, SW, ASTM-A105, ASME B16.11	200	mm	25	mm	ASME B16.11	ASTM-A105	1	0/27	
CWS-25-D16A-ROD.117	CWS	D16A	90 DEG ELBOW, CL 3000, SW, ASTM A105, ASME B16.11	25	mm	25	mm	ASME B16.11	ASTM A105	1	0/52	
CWS-25-D16A-ROD.117	CWS	D16A	90 DEG ELBOW, CL 3000, SW, ASTM A105, ASME B16.11	25	mm	25	mm	ASME B16.11	ASTM A105	1	0/52	
CWS-25-D16A-ROD.117	CWS	D16A	90 DEG ELBOW, CL 3000, SW, ASTM A105, ASME B16.11	25	mm	25	mm	ASME B16.11	ASTM A105	1	0/52	
CWS-25-D16A-ROD.117	CWS	D16A	SOCKOLET, CL3000, SW, ASTM-A105, ASME B16.11	25	mm	15	mm	ASME B16.11	ASTM-A105	1	0/14	
CWS-32-D16A-ROD.104	CWS	D16A	WELDING NECK FLANGE, RFFE/WN, PN 16, S235JRG2/1,0432/A105, DIN EN 1092-1	32	mm	32	mm	DIN EN 1092-1	S235JRG2/1,0432/A105	1	1/69	
CWS-32-D16A-ROD.104	CWS	D16A	CONCENTRIC REDUCER, BW, P235GH/1.0305/A106, DIN EN 10253-1	100	mm	65	mm	DIN EN 10253-1	P235GH/1.0305/A106	1	1/6	
CWS-32-D16A-ROD.104	CWS	D16A	SOCKOLET, CL3000, SW, ASTM-A105, ASME B16.11	32	mm	15	mm	ASME B16.11	ASTM-A105	1	0/14	
CWS-32-D16A-ROD.104	CWS	D16A	CONCENTRIC REDUCER, BW, P235GH/1.0305/A106, DIN EN 10253-1	65	mm	32	mm	DIN EN 10253-1	P235GH/1.0305/A106	1	0/7	
CWS-32-D16A-ROD.104	CWS	D16A	CONCENTRIC REDUCER, BW, P235GH/1.0305/A106, DIN EN 10253-1	65	mm	32	mm	DIN EN 10253-1	P235GH/1.0305/A106	1	0/7	
CWS-32-D16A-ROD.104	CWS	D16A	THREDOLET, CL3000, THD, ASTM-A105, ASME B16.11	100	mm	25	mm	ASME B16.11	ASTM-A105	1	0/27	
CWS-32-D16A-ROD.104	CWS	D16A	CONCENTRIC REDUCER, BW, P235GH/1.0305/A106, DIN EN 10253-1	100	mm	65	mm	DIN EN 10253-1	P235GH/1.0305/A106	1	1/6	
CWS-32-D16A-ROD.104	CWS	D16A	SOCKOLET, CL3000, SW, ASTM-A105, ASME B16.11	200	mm	32	mm	ASME B16.11	ASTM-A105	1	0/39	
CWS-32-D16A-ROD.111	CWS	D16A	CONCENTRIC REDUCER, CL3000, SW, ASTM-A105, ASME B16.11	32	mm	25	mm	ASME B16.11	ASTM-A105	1	0/17	
CWS-32-D16A-ROD.111	CWS	D16A	90 DEG ELBOW, CL 3000, SW, ASTM A105, ASME B16.11	32	mm	32	mm	ASME B16.11	ASTM A105	1	0/86	
CWS-32-D16A-ROD.111	CWS	D16A	90 DEG ELBOW, CL 3000, SW, ASTM A105, ASME B16.11	32	mm	32	mm	ASME B16.11	ASTM A105	1	0/86	
CWS-32-D16A-ROD.111	CWS	D16A	SOCKOLET, CL3000, SW, ASTM-A105, ASME B16.11	200	mm	32	mm	ASME B16.11	ASTM-A105	1	0/39	
CWS-32-D16A-ROD.121	CWS	D16A	CONCENTRIC REDUCER, CL3000, SW, ASTM-A105, ASME B16.11	40	mm	32	mm	ASME B16.11	ASTM-A105	1	0/26	
CWS-32-D16A-ROD.121	CWS	D16A	90 DEG ELBOW, CL 3000, SW, ASTM A105, ASME B16.11	32	mm	32	mm	ASME B16.11	ASTM A105	1	0/86	
CWS-32-D16A-ROD.121	CWS	D16A	CONCENTRIC REDUCER, BW, P235GH/1.0305/A106, DIN EN 10253-1	100	mm	65	mm	DIN EN 10253-1	P235GH/1.0305/A106	1	1/6	
CWS-32-D16A-ROD.121	CWS	D16A	THREDOLET, CL3000, THD, ASTM-A105, ASME B16.11	100	mm	25	mm	ASME B16.11	ASTM-A105	1	0/27	
CWS-32-D16A-ROD.121	CWS	D16A	CONCENTRIC REDUCER, BW, P235GH/1.0305/A106, DIN EN 10253-1	65	mm	32	mm	DIN EN 10253-1	P235GH/1.0305/A106	1	0/7	
CWS-32-D16A-ROD.121	CWS	D16A	WELDING NECK FLANGE, RFFE/WN, PN 16, S235JRG2/1,0432/A105, DIN EN 1092-1	32	mm	32	mm	DIN EN 1092-1	S235JRG2/1,0432/A105	1	1/69	
CWS-32-D16A-ROD.121	CWS	D16A	SOCKOLET, CL3000, SW, ASTM-A105, ASME B16.11	32	mm	15	mm	ASME B16.11	ASTM-A105	1	0/14	
CWS-32-D16A-ROD.121	CWS	D16A	NIPPLE, MTE/PE, 4 MM, PE/THD (DIN 2999), DIN EN 10255, P235GH/1.0305/A106, L=100MM	15	mm	15	mm	DIN EN 10255	P235GH/1.0305/A106	1	0/01	
CWS-32-D16A-ROD.121	CWS	D16A	CONCENTRIC REDUCER, BW, P235GH/1.0305/A106, DIN EN 10253-1	100	mm	65	mm	DIN EN 10253-1	P235GH/1.0305/A106	1	1/6	
CWS-32-D16A-ROD.121	CWS	D16A	CONCENTRIC REDUCER, BW, P235GH/1.0305/A106, DIN EN 10253-1	65	mm	32	mm	DIN EN 10253-1	P235GH/1.0305/A106	1	0/7	
CWS-40-D16A-ROD.101	CWS	D16A	WELDING NECK FLANGE, RFFE/WN, PN 16, S235JRG2/1,0432/A105, DIN EN 1092-1	40	mm	40	mm	DIN EN 1092-1	S235JRG2/1,0432/A105	1	1/86	
CWS-40-D16A-ROD.101	CWS	D16A	REDUCING BRANCH TEE, CL3000, SW, ASTM-A105, ASME B16.11	40	mm	20	mm	ASME B16.11	ASTM-A105	1	1/35	
CWS-40-D16A-ROD.101	CWS	D16A	REDUCING BRANCH TEE, CL3000, SW, ASTM-A105, ASME B16.11	40	mm	20	mm	ASME B16.11	ASTM-A105	1	1/35	
CWS-40-D16A-ROD.101	CWS	D16A	SOCKOLET, CL3000, SW, ASTM-A105, ASME B16.11	200	mm	40	mm	ASME B16.11	ASTM-A105	1	0/47	
CWS-40-D16A-ROD.101	CWS	D16A	90 DEG ELBOW, CL 3000, SW, ASTM A105, ASME B16.11	40	mm	40	mm	ASME B16.11	ASTM A105	1	1/09	
CWS-40-D16A-ROD.101	CWS	D16A	90 DEG ELBOW, CL 3000, SW, ASTM A105, ASME B16.11	40	mm	40	mm	ASME B16.11	ASTM A105	1	1/09	
CWS-40-D16A-ROD.101	CWS	D16A	90 DEG ELBOW, CL 3000, SW, ASTM A105, ASME B16.11	40	mm	40	mm	ASME B16.11	ASTM A105	1	1/09	
CWS-40-D16A-ROD.101	CWS	D16A	90 DEG ELBOW, CL 3000, SW, ASTM A105, ASME B16.11	40	mm	40	mm	ASME B16.11	ASTM A105	1	1/09	
CWS-40-D16A-ROD.116	CWS	D16A	90 DEG ELBOW, CL 3000, SW, ASTM A105, ASME B16.11	40	mm	40	mm	ASME B16.11	ASTM A105	1	1/09	
CWS-40-D16A-ROD.116	CWS	D16A	SOCKOLET, CL3000, SW, ASTM-A105, ASME B16.11	200	mm	40	mm	ASME B16.11	ASTM-A105	1	0/47	
CWS-40-D16A-ROD.116	CWS	D16A	REDUCING BRANCH TEE, CL3000, SW, ASTM-A105, ASME B16.11	40	mm	20	mm	ASME B16.11	ASTM-A105	1	1/35	
CWS-40-D16A-ROD.116	CWS	D16A	REDUCING BRANCH TEE, CL3000, SW, ASTM-A105, ASME B16.11	40	mm	20	mm	ASME B16.11	ASTM-A105	1	1/35	
CWS-40-D16A-ROD.116	CWS	D16A	90 DEG ELBOW, CL 3000, SW, ASTM A105, ASME B16.11	40	mm	40	mm	ASME B16.11	ASTM A105	1	1/09	
CWS-65-D16A-ROD.122	CWS	D16A	CONCENTRIC REDUCER, BW, P235GH/1.0305/A106, DIN EN 10253-1	100	mm	65	mm	DIN EN 10253-1	P235GH/1.0305/A106	1	1/6	
CWS-65-D16A-ROD.122	CWS	D16A	NIPPLE, MTE/PE, 4 MM, PE/THD (DIN 2999), DIN EN 10255, P235GH/1.0305/A106, L=100MM	15	mm	15	mm	DIN EN 10255	P235GH/1.0305/A106	1	0/01	
CWS-65-D16A-ROD.122	CWS	D16A	SOCKOLET, CL3000, SW, ASTM-A105, ASME B16.11	65	mm	15	mm	ASME B16.11	ASTM-A105	1	0/14	
CWS-65-D16A-ROD.122	CWS	D16A	WELDING NECK FLANGE, RFFE/WN, PN 16, S235JRG2/1,0432/A105, DIN EN 1092-1	65	mm	40	mm	DIN EN 1092-1	S235JRG2/1,0432/A105	1	1/86	
CWS-65-D16A-ROD.122	CWS	D16A	WELDING NECK FLANGE, RFFE/WN, PN 16, S235JRG2/1,0432/A105, DIN EN 1092-1	65	mm	65	mm	DIN EN 1092-1	S235JRG2/1,0432/A105	1	1/86	
CWS-65-D16A-ROD.122	CWS	D16A	WELDING NECK FLANGE, RFFE/WN, PN 16, S235JRG2/1,0432/A105, DIN EN 1092-1	65	mm	40	mm	DIN EN 1092-1	S235JRG2/1,0432/A105	1	1/86	
CWS-65-D16A-ROD.122	CWS	D16A	CONCENTRIC REDUCER, BW, P235GH/1.0305/A106, DIN EN 10253-1	100	mm	65	mm	DIN EN 10253-1	P235GH/1.0305/A106	1	1/6	
CWS-65-D16A-ROD.122	CWS	D16A	THREDOLET, CL3000, THD, ASTM-A105, ASME B16.11	100	mm	25	mm	ASME B16.11	ASTM-A105	1	0/27	
CWS-40-D16A-ROD.123	CWS	D16A	90 DEG ELBOW, CL 3000, SW, ASTM A105, ASME B16.11	40	mm	40	mm	ASME B16.11	ASTM A105	1	1/09	
CWS-40-D16A-ROD.123	CWS	D16A	90 DEG ELBOW, CL 3000, SW, ASTM A105, ASME B16.11	40	mm	40	mm	ASME B16.11	ASTM A105	1	1/09	
CWS-40-D16A-ROD.123	CWS	D16A	SOCKOLET, CL3000, SW, ASTM-A105, ASME B16.11	40	mm	15	mm	ASME B16.11	ASTM-A105	1	0/14	
CWS-40-D16A-ROD.123	CWS	D16A	90 DEG ELBOW, CL 3000, SW, ASTM A105, ASME B16.11	40	mm	40	mm	ASME B16.11	ASTM A105	1	1/09	
CWS-40-D16A-ROD.123	CWS	D16A	THREDOLET, CL3000, THD, ASTM-A105, ASME B16.11	100	mm	25	mm	ASME B16.11	ASTM-A105	1	0/27	
CWS-40-D16A-ROD.123	CWS	D16A	NIPPLE, MTE/PE, 4 MM, PE/THD (DIN 2999), DIN EN 10255, P235GH/1.0305/A106, L=100MM	15	mm	15	mm	DIN EN 10255	P235GH/1.0305/A106	1	0/01	
CWS-40-D16A-ROD.123	CWS	D16A	CONCENTRIC REDUCER, BW, P235GH/1.0305/A106, DIN EN 10253-1	65	mm	40	mm	DIN EN 10253-1	P235GH/1.0305/A106	1	0/7	
CWS-40-D16A-ROD.123	CWS	D16A	CONCENTRIC REDUCER, BW, P235GH/1.0305/A106, DIN EN 10253-1	65	mm	40	mm	DIN EN 10253-1	P235GH/1.0305/A106	1	0/7	
CWS-40-D16A-ROD.123	CWS	D16A	CONCENTRIC REDUCER, BW, P235GH/1.0305/A106, DIN EN 10253-1	100	mm	65	mm	DIN EN 10253-1	P235GH/1.0305/A106	1	1/6	
CWS-40-D16A-ROD.123	CWS	D16A	CONCENTRIC REDUCER, BW, P235GH/1.0305/A106, DIN EN 10253-1	100	mm	65	mm	DIN EN 10253-1	P235GH/1.0305/A106	1	1/6	
CWS-40-D16A-ROD.123	CWS	D16A	90 DEG ELBOW, CL 3000, SW, ASTM A105, ASME B16.11	40	mm	40	mm	ASME B16.11	ASTM A105	1	1/09	
CWS-40-D16A-ROD.123	CWS	D16A	WELDING NECK FLANGE, RFFE/WN, PN 16, S235JRG2/1,0432/A105, DIN EN 1092-1	40	mm	40	mm	DIN EN 1092-1	S235JRG2/1,0432/A105	1	1/86	
CWS-40-D16A-ROD.123	CWS	D16A	90 DEG ELBOW, CL 3000, SW, ASTM A105, ASME B16.11	40	mm	40	mm	ASME B16.11	ASTM A105	1	1/09	
CWS-65-D16A-ROD.124	CWS	D16A	TEE,BW, P235GH/1.0305/A106, DIN EN 10253-1	65	mm	40	mm	DIN EN 10253-1	P235GH/1.0305/A106	1	2/363	
CWS-65-D16A-ROD.124	CWS	D16A	90 DEG ELBOW, 3D, BW, P235GH/1.0305/A106, DIN EN 10253-1	65	mm	65	mm	DIN EN 10253-1	P235GH/1.0305/A106	1	0/79	
CWS-65-D16A-ROD.124	CWS	D16A	90 DEG ELBOW, 3D, BW, P235GH/1.0305/A106, DIN EN 10253-1	65	mm	65	mm	DIN EN 10253-1	P235GH/1.0305/A106	1	0/79	

PIPE TAG	FLUID	SPECI.	TYPE	DN	UNITS	DN	UNITS	NORMATIVE	MATERIAL	QUANT.	HEIGHT	PRICE
CWS-65-D16A-ROD.124	CWS	D16A	45 DEG ELBOW, 3D, BW, P235GH/1.0305/A106, DIN EN 10253-1	65	mm	65	mm	DIN EN 10253-1	P235GH/1.0305/A106	1	0/395	
CWS-65-D16A-ROD.124	CWS	D16A	90 DEG ELBOW, 3D, BW, P235GH/1.0305/A106, DIN EN 10253-1	65	mm	65	mm	DIN EN 10253-1	P235GH/1.0305/A106	1	0/79	
CWS-65-D16A-ROD.124	CWS	D16A	45 DEG ELBOW, 3D, BW, P235GH/1.0305/A106, DIN EN 10253-1	65	mm	65	mm	DIN EN 10253-1	P235GH/1.0305/A106	1	0/395	
CWS-65-D16A-ROD.124	CWS	D16A	ECCENTRIC REDUCER, BW, P235GH/1.0305/A106, DIN EN 10253-1	65	mm	40	mm	DIN EN 10253-1	P235GH/1.0305/A106	1	0/7	
CWS-65-D16A-ROD.124	CWS	D16A	90 DEG ELBOW, 3D, BW, P235GH/1.0305/A106, DIN EN 10253-1	65	mm	65	mm	DIN EN 10253-1	P235GH/1.0305/A106	1	0/79	
CWS-65-D16A-ROD.124	CWS	D16A	SOCKOLET, CL3000, SW, ASTM-A105, ASME B16.11	65	mm	20	mm	ASME B16.11	ASTM-A105	1	0/15	
CWS-65-D16A-ROD.124	CWS	D16A	SOCKOLET, CL3000, SW, ASTM-A105, ASME B16.11	65	mm	20	mm	ASME B16.11	ASTM-A105	1	0/15	
CWS-65-D16A-ROD.124	CWS	D16A	90 DEG ELBOW, 3D, BW, P235GH/1.0305/A106, DIN EN 10253-1	65	mm	65	mm	DIN EN 10253-1	P235GH/1.0305/A106	1	0/79	
CWS-65-D16A-ROD.124	CWS	D16A	90 DEG ELBOW, 3D, BW, P235GH/1.0305/A106, DIN EN 10253-1	65	mm	65	mm	DIN EN 10253-1	P235GH/1.0305/A106	1	0/79	
CWS-65-D16A-ROD.124	CWS	D16A	90 DEG ELBOW, 3D, BW, P235GH/1.0305/A106, DIN EN 10253-1	65	mm	65	mm	DIN EN 10253-1	P235GH/1.0305/A106	1	0/79	
CWS-65-D16A-ROD.124	CWS	D16A	90 DEG ELBOW, 3D, BW, P235GH/1.0305/A106, DIN EN 10253-1	65	mm	65	mm	DIN EN 10253-1	P235GH/1.0305/A106	1	0/79	
CWS-65-D16A-ROD.124	CWS	D16A	90 DEG ELBOW, 3D, BW, P235GH/1.0305/A106, DIN EN 10253-1	65	mm	65	mm	DIN EN 10253-1	P235GH/1.0305/A106	1	0/79	
CWS-65-D16A-ROD.124	CWS	D16A	45 DEG ELBOW, 3D, BW, P235GH/1.0305/A106, DIN EN 10253-1	65	mm	65	mm	DIN EN 10253-1	P235GH/1.0305/A106	1	0/395	
CWS-80-D16A-ROD.105	CWS	D16A	PLAIN FLANGE,, FFFE/WN, PN 16, S235JRG2/1,0432/A105, DIN EN 1092-1	80	mm	80	mm	DIN EN 1092-1	S235JRG2/1,0432/A105	1	3/7	
CWS-80-D16A-ROD.105	CWS	D16A	PLAIN FLANGE,, FFFE/WN, PN 16, S235JRG2/1,0432/A105, DIN EN 1092-1	80	mm	80	mm	DIN EN 1092-1	S235JRG2/1,0432/A105	1	3/7	
CWS-80-D16A-ROD.105	CWS	D16A	WELDING NECK FLANGE,, RFFE/WN, PN 16, S235JRG2/1,0432/A105, DIN EN 1092-1	80	mm	80	mm	DIN EN 1092-1	S235JRG2/1,0432/A105	1	3/7	
CWS-80-D16A-ROD.105	CWS	D16A	WELDING NECK FLANGE,, RFFE/WN, PN 16, S235JRG2/1,0432/A105, DIN EN 1092-1	80	mm	80	mm	DIN EN 1092-1	S235JRG2/1,0432/A105	1	3/7	
CWS-80-D16A-ROD.105	CWS	D16A	PLAIN FLANGE,, FFFE/WN, PN 16, S235JRG2/1,0432/A105, DIN EN 1092-1	80	mm	80	mm	DIN EN 1092-1	S235JRG2/1,0432/A105	1	3/7	
CWS-80-D16A-ROD.105	CWS	D16A	PLAIN FLANGE,, FFFE/WN, PN 16, S235JRG2/1,0432/A105, DIN EN 1092-1	80	mm	80	mm	DIN EN 1092-1	S235JRG2/1,0432/A105	1	3/401942775	
CWS-80-D16A-ROD.105	CWS	D16A	TEE,BW, P235GH/1.0305/A106, DIN EN 10253-1	80	mm	80	mm	DIN EN 10253-1	P235GH/1.0305/A106	1	1/22	
CWS-80-D16A-ROD.105	CWS	D16A	90 DEG ELBOW, 3D, BW, P235GH/1.0305/A106, DIN EN 10253-1	80	mm	80	mm	DIN EN 10253-1	P235GH/1.0305/A106	1	3/401942775	
CWS-80-D16A-ROD.105	CWS	D16A	TEE,BW, P235GH/1.0305/A106, DIN EN 10253-1	80	mm	80	mm	DIN EN 10253-1	P235GH/1.0305/A106	1	3/7	
CWS-80-D16A-ROD.105	CWS	D16A	PLAIN FLANGE,, FFFE/WN, PN 16, S235JRG2/1,0432/A105, DIN EN 1092-1	80	mm	80	mm	DIN EN 1092-1	S235JRG2/1,0432/A105	1	3/7	
CWS-80-D16A-ROD.105	CWS	D16A	PLAIN FLANGE,, FFFE/WN, PN 16, S235JRG2/1,0432/A105, DIN EN 1092-1	80	mm	80	mm	DIN EN 1092-1	S235JRG2/1,0432/A105	1	1/22	
CWS-80-D16A-ROD.105	CWS	D16A	90 DEG ELBOW, 3D, BW, P235GH/1.0305/A106, DIN EN 10253-1	80	mm	80	mm	DIN EN 10253-1	P235GH/1.0305/A106	1	1/22	
CWS-80-D16A-ROD.105	CWS	D16A	90 DEG ELBOW, 3D, BW, P235GH/1.0305/A106, DIN EN 10253-1	80	mm	80	mm	DIN EN 10253-1	P235GH/1.0305/A106	1	0/27	
CWS-80-D16A-ROD.105	CWS	D16A	THREDOLET, CL3000, THD, ASTM-A105, ASME B16.11	80	mm	25	mm	ASME B16.11	ASTM-A105	1	0/14	
CWS-80-D16A-ROD.105	CWS	D16A	SOCKOLET, CL3000, SW, ASTM-A105, ASME B16.11	80	mm	15	mm	ASME B16.11	ASTM-A105	1	0/01	
CWS-80-D16A-ROD.105	CWS	D16A	NIPPLE, MTE/PE, 4 MM, PE/THD (DIN 2999), DIN EN 10255, P235GH/1.0305/A106, L=100MM	15	mm	15	mm	DIN EN 10255	P235GH/1.0305/A106	1	1/22	
CWS-80-D16A-ROD.105	CWS	D16A	90 DEG ELBOW, 3D, BW, P235GH/1.0305/A106, DIN EN 10253-1	80	mm	80	mm	DIN EN 10253-1	P235GH/1.0305/A106	1	1/22	
CWS-80-D16A-ROD.105	CWS	D16A	90 DEG ELBOW, 3D, BW, P235GH/1.0305/A106, DIN EN 10253-1	80	mm	80	mm	DIN EN 10253-1	P235GH/1.0305/A106	1	3/7	
CWS-80-D16A-ROD.105	CWS	D16A	WELDING NECK FLANGE,, RFFE/WN, PN 16, S235JRG2/1,0432/A105, DIN EN 1092-1	80	mm	80	mm	DIN EN 10253-1	P235GH/1.0305/A106	1	3/7	
CWS-80-D16A-ROD.105	CWS	D16A	PLAIN FLANGE,, FFFE/WN, PN 16, S235JRG2/1,0432/A105, DIN EN 1092-1	80	mm	80	mm	DIN EN 1092-1	S235JRG2/1,0432/A105	1	3/7	
CWS-80-D16A-ROD.105	CWS	D16A	PLAIN FLANGE,, FFFE/WN, PN 16, S235JRG2/1,0432/A105, DIN EN 1092-1	80	mm	80	mm	DIN EN 1092-1	S235JRG2/1,0432/A105	1	3/7	
KWR-100-D16A-ROD.122	KWR	D16A	WELDING NECK FLANGE, RFFE/WN, PN 16, S235JRG2/1,0432/A105, DIN EN 1092-1	100	mm	100	mm	DIN EN 1092-1	S235JRG2/1,0432/A105	1	4/62	
KWR-100-D16A-ROD.122	KWR	D16A	90 DEG ELBOW, 3D, BW, P235GH/1.0305/A106, DIN EN 10253-1	100	mm	100	mm	DIN EN 10253-1	P235GH/1.0305/A106	1	2/36	
KWR-100-D16A-ROD.122	KWR	D16A	CONCENTRIC REDUCER, BW, P235GH/1.0305/A106, DIN EN 10253-1	150	mm	100	mm	DIN EN 10253-1	P235GH/1.0305/A106	1	3/8	
KWR-100-D16A-ROD.122	KWR	D16A	45 DEG ELBOW, 3D, BW, P235GH/1.0305/A106, DIN EN 10253-1	100	mm	100	mm	DIN EN 10253-1	P235GH/1.0305/A106	1	1/18	
KWR-200-D16A-ROD.101	KWR	D16A	WELDING NECK FLANGE, RFFE/WN, PN 16, S235JRG2/1,0432/A105, DIN EN 1092-1	200	mm	200	mm	DIN EN 1092-1	S235JRG2/1,0432/A105	1	11	
KWR-200-D16A-ROD.102	KWR	D16A	WELDING NECK FLANGE, RFFE/WN, PN 16, S235JRG2/1,0432/A105, DIN EN 1092-1	200	mm	200	mm	DIN EN 1092-1	S235JRG2/1,0432/A105	1	11	
KWR-200-D16A-ROD.85	KWR	D16A	WELDING NECK FLANGE, RFFE/WN, PN 16, S235JRG2/1,0432/A105, DIN EN 1092-1	200	mm	200	mm	DIN EN 1092-1	S235JRG2/1,0432/A105	1	11	
KWR-200-D16A-ROD.86	KWR	D16A	WELDING NECK FLANGE, RFFE/WN, PN 16, S235JRG2/1,0432/A105, DIN EN 1092-1	200	mm	200	mm	DIN EN 1092-1	S235JRG2/1,0432/A105	1	11	
KWR-200-D16-A-ROD.93	KWR	D16A	90 DEG ELBOW, 3D, BW, P235GH/1.0305/A106, DIN EN 10253-1	200	mm	200	mm	DIN EN 10253-1	P235GH/1.0305/A106	1	15/8	
KWR-200-D16-A-ROD.93	KWR	D16A	45 DEG ELBOW, 3D, BW, P235GH/1.0305/A106, DIN EN 10253-1	200	mm	200	mm	DIN EN 10253-1	P235GH/1.0305/A106	1	7/9	
KWR-200-D16-A-ROD.93	KWR	D16A	WELDING NECK FLANGE, RFFE/WN, PN 16, S235JRG2/1,0432/A105, DIN EN 1092-1	200	mm	200	mm	DIN EN 1092-1	S235JRG2/1,0432/A105	1	11	
KWR-200-D16-A-ROD.94	KWR	D16A	90 DEG ELBOW, 3D, BW, P235GH/1.0305/A106, DIN EN 10253-1	200	mm	200	mm	DIN EN 10253-1	P235GH/1.0305/A106	1	15/8	
KWR-200-D16-A-ROD.94	KWR	D16A	45 DEG ELBOW, 3D, BW, P235GH/1.0305/A106, DIN EN 10253-1	200	mm	200	mm	DIN EN 10253-1	P235GH/1.0305/A106	1	7/9	
KWR-200-D16-A-ROD.94	KWR	D16A	WELDING NECK FLANGE, RFFE/WN, PN 16, S235JRG2/1,0432/A105, DIN EN 1092-1	200	mm	200	mm	DIN EN 1092-1	S235JRG2/1,0432/A105	1	11	
KWR-300-D16A-ROD.103	KWR	D16A	REDUCING BRANCH TEE, BW, P235GH/1.0305/A106, DIN EN 10253-1	300	mm	200	mm	DIN EN 10253-1	P235GH/1.0305/A106	1	56	
KWR-300-D16A-ROD.103	KWR	D16A	REDUCING BRANCH TEE, BW, P235GH/1.0305/A106, DIN EN 10253-1	300	mm	200	mm	DIN EN 10253-1	P235GH/1.0305/A106	1	56	
KWR-300-D16A-ROD.103	KWR	D16A	REDUCING BRANCH TEE, BW, P235GH/1.0305/A106, DIN EN 10253-1	300	mm	150	mm	DIN EN 10253-1	P235GH/1.0305/A106	1	56	
KWR-300-D16A-ROD.103	KWR	D16A	CAP, BW, P235GH/1.0305/A106, DIN EN 10253-1	300	mm	0	mm	DIN EN 10253-1	P235GH/1.0305/A106	1	14	
KWR-300-D16A-ROD.103	KWR	D16A	90 DEG ELBOW, 3D, BW, P235GH/1.0305/A106, DIN EN 10253-1	300	mm	300	mm	DIN EN 10253-1	P235GH/1.0305/A106	1	39/8	
KWR-300-D16A-ROD.119	KWR	D16A	CAP, BW, P235GH/1.0305/A106, DIN EN 10253-1	300	mm	0	mm	DIN EN 10253-1	P235GH/1.0305/A106	1	14	
KWR-300-D16A-ROD.119	KWR	D16A	CAP, BW, P235GH/1.0305/A106, DIN EN 10253-1	300	mm	0	mm	DIN EN 10253-1	P235GH/1.0305/A106	1	14	
KWR-300-D16A-ROD.119	KWR	D16A	TEE,BW, P235GH/1.0305/A106, DIN EN 10253-1	300	mm	300	mm	DIN EN 10253-1	P235GH/1.0305/A106	1	72/12118683	
KWR-300-D16A-ROD.119	KWR	D16A	REDUCING BRANCH TEE, BW, P235GH/1.0305/A106, DIN EN 10253-1	300	mm	200	mm	DIN EN 10253-1	P235GH/1.0305/A106	1	56	
KWR-300-D16A-ROD.119	KWR	D16A	90 DEG ELBOW, 3D, BW, P235GH/1.0305/A106, DIN EN 10253-1	300	mm	300	mm	DIN EN 10253-1	P235GH/1.0305/A106	1	39/8	
KWR-300-D16A-ROD.119	KWR	D16A	90 DEG ELBOW, 3D, BW, P235GH/1.0305/A106, DIN EN 10253-1	300	mm	300	mm	DIN EN 10253-1	P235GH/1.0305/A106	1	39/8	
KWR-300-D16A-ROD.119	KWR	D16A	REDUCING BRANCH TEE, BW, P235GH/1.0305/A106, DIN EN 10253-1	300	mm	200	mm	DIN EN 10253-1	P235GH/1.0305/A106	1	56	
KWR-300-D16A-ROD.119	KWR	D16A	45 DEG ELBOW, 3D, BW, P235GH/1.0305/A106, DIN EN 10253-1	300	mm	300	mm	DIN EN 10253-1	P235GH/1.0305/A106	1	19/9	
KWR-300-D16A-ROD.119	KWR	D16A	45 DEG ELBOW, 3D, BW, P235GH/1.0305/A106, DIN EN 10253-1	300	mm	300	mm	DIN EN 10253-1	P235GH/1.0305/A106	1	19/9	

PIPE TAG	FLUID	SPECI.	TYPE	DN	UNITS	DN	UNITS	NORMATIVE	MATERIAL	QUANT.	HEIGHT	PRICE
KWR-300-D16A-ROD.120	KWR	D16A	TEE,BW, P235GH/1.0305/A106, DIN EN 10253-1	300	mm	300	mm	DIN EN 10253-1	P235GH/1.0305/A106	1	72/12118683	
KWR-300-D16A-ROD.120	KWR	D16A	TEE,BW, P235GH/1.0305/A106, DIN EN 10253-1	300	mm	300	mm	DIN EN 10253-1	P235GH/1.0305/A106	1	72/12118683	
KWR-300-D16A-ROD.120	KWR	D16A	REDUCING BRANCH TEE, BW, P235GH/1.0305/A106, DIN EN 10253-1	300	mm	150	mm	DIN EN 10253-1	P235GH/1.0305/A106	1	56	
KWR-300-D16A-ROD.120	KWR	D16A	CAP, BW, P235GH/1.0305/A106, DIN EN 10253-1	300	mm	0	mm	DIN EN 10253-1	P235GH/1.0305/A106	1	14	
KWR-300-D16A-ROD.120	KWR	D16A	TEE,BW, P235GH/1.0305/A106, DIN EN 10253-1	300	mm	300	mm	DIN EN 10253-1	P235GH/1.0305/A106	1	72/12118683	
KWR-300-D16A-ROD.120	KWR	D16A	45 DEG ELBOW, 3D, BW, P235GH/1.0305/A106, DIN EN 10253-1	300	mm	300	mm	DIN EN 10253-1	P235GH/1.0305/A106	1	19/9	
KWR-300-D16A-ROD.120	KWR	D16A	TEE,BW, P235GH/1.0305/A106, DIN EN 10253-1	300	mm	300	mm	DIN EN 10253-1	P235GH/1.0305/A106	1	72/12118683	
KWR-300-D16A-ROD.120	KWR	D16A	TEE,BW, P235GH/1.0305/A106, DIN EN 10253-1	300	mm	300	mm	DIN EN 10253-1	P235GH/1.0305/A106	1	72/12118683	
KWR-300-D16A-ROD.120	KWR	D16A	TEE,BW, P235GH/1.0305/A106, DIN EN 10253-1	300	mm	300	mm	DIN EN 10253-1	P235GH/1.0305/A106	1	72/12118683	
KWR-300-D16A-ROD.120	KWR	D16A	TEE,BW, P235GH/1.0305/A106, DIN EN 10253-1	300	mm	300	mm	DIN EN 10253-1	P235GH/1.0305/A106	1	72/12118683	
KWR-300-D16A-ROD.120	KWR	D16A	TEE,BW, P235GH/1.0305/A106, DIN EN 10253-1	300	mm	300	mm	DIN EN 10253-1	P235GH/1.0305/A106	1	72/12118683	
KWR-300-D16A-ROD.120	KWR	D16A	TEE,BW, P235GH/1.0305/A106, DIN EN 10253-1	300	mm	300	mm	DIN EN 10253-1	P235GH/1.0305/A106	1	72/12118683	
KWR-300-D16A-ROD.120	KWR	D16A	TEE,BW, P235GH/1.0305/A106, DIN EN 10253-1	300	mm	300	mm	DIN EN 10253-1	P235GH/1.0305/A106	1	72/12118683	
KWR-300-D16A-ROD.120	KWR	D16A	90 DEG ELBOW, 3D, BW, P235GH/1.0305/A106, DIN EN 10253-1	300	mm	300	mm	DIN EN 10253-1	P235GH/1.0305/A106	1	39/8	
KWR-300-D16A-ROD.120	KWR	D16A	CAP, BW, P235GH/1.0305/A106, DIN EN 10253-1	300	mm	0	mm	DIN EN 10253-1	P235GH/1.0305/A106	1	14	
KWR-300-D16A-ROD.95	KWR	D16A	REDUCING BRANCH TEE, BW, P235GH/1.0305/A106, DIN EN 10253-1	300	mm	200	mm	DIN EN 10253-1	P235GH/1.0305/A106	1	56	
KWR-300-D16A-ROD.95	KWR	D16A	CAP, BW, P235GH/1.0305/A106, DIN EN 10253-1	300	mm	0	mm	DIN EN 10253-1	P235GH/1.0305/A106	1	14	
KWR-300-D16A-ROD.95	KWR	D16A	90 DEG ELBOW, 3D, BW, P235GH/1.0305/A106, DIN EN 10253-1	300	mm	300	mm	DIN EN 10253-1	P235GH/1.0305/A106	1	39/8	
KWR-300-D16A-ROD.95	KWR	D16A	REDUCING BRANCH TEE, BW, P235GH/1.0305/A106, DIN EN 10253-1	300	mm	200	mm	DIN EN 10253-1	P235GH/1.0305/A106	1	56	
KWR-400-D16A-ROD.121	KWR	D16A	REDUCING BRANCH TEE, BW, P235GH/1.0305/A106, DIN EN 10253-1	400	mm	300	mm	DIN EN 10253-1	P235GH/1.0305/A106	1	85	
KWR-400-D16A-ROD.121	KWR	D16A	REDUCING BRANCH TEE, BW, P235GH/1.0305/A106, DIN EN 10253-1	400	mm	150	mm	DIN EN 10253-1	P235GH/1.0305/A106	1	74	
KWR-400-D16A-ROD.121	KWR	D16A	CAP, BW, P235GH/1.0305/A106, DIN EN 10253-1	400	mm	0	mm	DIN EN 10253-1	P235GH/1.0305/A106	1	18/2	
KWR-400-D16A-ROD.121	KWR	D16A	REDUCING BRANCH TEE, BW, P235GH/1.0305/A106, DIN EN 10253-1	400	mm	300	mm	DIN EN 10253-1	P235GH/1.0305/A106	1	85	
KWR-400-D16A-ROD.121	KWR	D16A	REDUCING BRANCH TEE, BW, P235GH/1.0305/A106, DIN EN 10253-1	400	mm	300	mm	DIN EN 10253-1	P235GH/1.0305/A106	1	85	
KWR-400-D16A-ROD.121	KWR	D16A	REDUCING BRANCH TEE, BW, P235GH/1.0305/A106, DIN EN 10253-1	400	mm	200	mm	DIN EN 10253-1	P235GH/1.0305/A106	1	74	
KWR-400-D16A-ROD.121	KWR	D16A	90 DEG ELBOW, 3D, BW, P235GH/1.0305/A106, DIN EN 10253-1	400	mm	400	mm	DIN EN 10253-1	P235GH/1.0305/A106	1	82/6	
KWS-150-D16-A-ROD.100	KWS	D16A	90 DEG ELBOW, 3D, BW, P235GH/1.0305/A106, DIN EN 10253-1	150	mm	150	mm	DIN EN 10253-1	P235GH/1.0305/A106	1	6/53	
KWS-150-D16-A-ROD.100	KWS	D16A	90 DEG ELBOW, 3D, BW, P235GH/1.0305/A106, DIN EN 10253-1	150	mm	150	mm	DIN EN 10253-1	P235GH/1.0305/A106	1	6/53	
KWS-150-D16-A-ROD.100	KWS	D16A	45 DEG ELBOW, 3D, BW, P235GH/1.0305/A106, DIN EN 10253-1	150	mm	150	mm	DIN EN 10253-1	P235GH/1.0305/A106	1	3/25	
KWS-150-D16-A-ROD.100	KWS	D16A	90 DEG ELBOW, 3D, BW, P235GH/1.0305/A106, DIN EN 10253-1	150	mm	150	mm	DIN EN 10253-1	P235GH/1.0305/A106	1	6/53	
KWS-150-D16-A-ROD.100	KWS	D16A	90 DEG ELBOW, 3D, BW, P235GH/1.0305/A106, DIN EN 10253-1	150	mm	150	mm	DIN EN 10253-1	P235GH/1.0305/A106	1	6/53	
KWS-150-D16-A-ROD.100	KWS	D16A	WELDING NECK FLANGE, RFFE/WN, PN 40, S235JRG2/1,0432/A105, DIN EN 1092-1	150	mm	150	mm	DIN EN 1092-1	S235JRG2/1,0432/A105	1	7/75	
KWS-150-D16-A-ROD.100	KWS	D16A	90 DEG ELBOW, 3D, BW, P235GH/1.0305/A106, DIN EN 10253-1	150	mm	150	mm	DIN EN 10253-1	P235GH/1.0305/A106	1	6/53	
KWS-150-D16-A-ROD.100	KWS	D16A	90 DEG ELBOW, 3D, BW, P235GH/1.0305/A106, DIN EN 10253-1	150	mm	150	mm	DIN EN 10253-1	P235GH/1.0305/A106	1	6/53	
KWS-150-D16-A-ROD.100	KWS	D16A	WELDING NECK FLANGE, RFFE/WN, PN 40, S235JRG2/1,0432/A105, DIN EN 1092-1	150	mm	150	mm	DIN EN 1092-1	S235JRG2/1,0432/A105	1	7/75	
KWS-150-D16-A-ROD.100	KWS	D16A	WELDING NECK FLANGE, RFFE/WN, PN 16, S235JRG2/1,0432/A105, DIN EN 1092-1	200	mm	200	mm	DIN EN 1092-1	S235JRG2/1,0432/A105	1	11	
KWS-150-D16-A-ROD.100	KWS	D16A	CONCENTRIC REDUCER, BW, P235GH/1.0305/A106, DIN EN 10253-1	200	mm	150	mm	DIN EN 10253-1	P235GH/1.0305/A106	1	6/5	
KWS-150-D16A-ROD.73	KWS	D16A	90 DEG ELBOW, 3D, BW, P235GH/1.0305/A106, DIN EN 10253-1	150	mm	150	mm	DIN EN 10253-1	P235GH/1.0305/A106	1	6/53	
KWS-150-D16A-ROD.73	KWS	D16A	90 DEG ELBOW, 3D, BW, P235GH/1.0305/A106, DIN EN 10253-1	150	mm	150	mm	DIN EN 10253-1	P235GH/1.0305/A106	1	6/53	
KWS-150-D16A-ROD.73	KWS	D16A	PLAIN FLANGE, FFFE/WN, PN 16, S235JRG2/1,0432/A105, DIN EN 1092-1	150	mm	150	mm	DIN EN 1092-1	S235JRG2/1,0432/A105	1	7/75	
KWS-150-D16A-ROD.73	KWS	D16A	PLAIN FLANGE, FFFE/WN, PN 16, S235JRG2/1,0432/A105, DIN EN 1092-1	150	mm	150	mm	DIN EN 1092-1	S235JRG2/1,0432/A105	1	7/75	
KWS-150-D16A-ROD.73	KWS	D16A	90 DEG ELBOW, 3D, BW, P235GH/1.0305/A106, DIN EN 10253-1	150	mm	150	mm	DIN EN 10253-1	P235GH/1.0305/A106	1	6/53	
KWS-150-D16A-ROD.73	KWS	D16A	90 DEG ELBOW, 3D, BW, P235GH/1.0305/A106, DIN EN 10253-1	150	mm	150	mm	DIN EN 10253-1	P235GH/1.0305/A106	1	6/53	
KWS-150-D16A-ROD.74	KWS	D16A	PLAIN FLANGE, FFFE/WN, PN 16, S235JRG2/1,0432/A105, DIN EN 1092-1	150	mm	150	mm	DIN EN 1092-1	S235JRG2/1,0432/A105	1	7/75	
KWS-150-D16A-ROD.74	KWS	D16A	PLAIN FLANGE, FFFE/WN, PN 16, S235JRG2/1,0432/A105, DIN EN 1092-1	150	mm	150	mm	DIN EN 1092-1	S235JRG2/1,0432/A105	1	7/75	
KWS-150-D16A-ROD.74	KWS	D16A	45 DEG ELBOW, 3D, BW, P235GH/1.0305/A106, DIN EN 10253-1	150	mm	150	mm	DIN EN 10253-1	P235GH/1.0305/A106	1	3/25	
KWS-150-D16A-ROD.75	KWS	D16A	90 DEG ELBOW, 3D, BW, P235GH/1.0305/A106, DIN EN 10253-1	150	mm	150	mm	DIN EN 10253-1	P235GH/1.0305/A106	1	6/53	
KWS-150-D16A-ROD.75	KWS	D16A	PLAIN FLANGE, FFFE/WN, PN 16, S235JRG2/1,0432/A105, DIN EN 1092-1	150	mm	150	mm	DIN EN 1092-1	S235JRG2/1,0432/A105	1	7/75	
KWS-150-D16A-ROD.75	KWS	D16A	PLAIN FLANGE, FFFE/WN, PN 16, S235JRG2/1,0432/A105, DIN EN 1092-1	150	mm	150	mm	DIN EN 1092-1	S235JRG2/1,0432/A105	1	7/75	
KWS-150-D16-A-ROD.82	KWS	D16A	CONCENTRIC REDUCER, BW, P235GH/1.0305/A106, DIN EN 10253-1	200	mm	150	mm	DIN EN 10253-1	P235GH/1.0305/A106	1	6/5	
KWS-150-D16-A-ROD.82	KWS	D16A	WELDING NECK FLANGE, RFFE/WN, PN 16, S235JRG2/1,0432/A105, DIN EN 1092-1	200	mm	200	mm	DIN EN 1092-1	S235JRG2/1,0432/A105	1	11	
KWS-150-D16-A-ROD.82	KWS	D16A	90 DEG ELBOW, 3D, BW, P235GH/1.0305/A106, DIN EN 10253-1	150	mm	150	mm	DIN EN 10253-1	P235GH/1.0305/A106	1	6/53	
KWS-150-D16-A-ROD.83	KWS	D16A	WELDING NECK FLANGE, RFFE/WN, PN 40, S235JRG2/1,0432/A105, DIN EN 1092-1	150	mm	150	mm	DIN EN 1092-1	S235JRG2/1,0432/A105	1	7/75	
KWS-150-D16-A-ROD.83	KWS	D16A	90 DEG ELBOW, 3D, BW, P235GH/1.0305/A106, DIN EN 10253-1	150	mm	150	mm	DIN EN 10253-1	P235GH/1.0305/A106	1	6/53	
KWS-150-D16-A-ROD.83	KWS	D16A	90 DEG ELBOW, 3D, BW, P235GH/1.0305/A106, DIN EN 10253-1	150	mm	150	mm	DIN EN 10253-1	P235GH/1.0305/A106	1	6/53	
KWS-150-D16-A-ROD.83	KWS	D16A	90 DEG ELBOW, 3D, BW, P235GH/1.0305/A106, DIN EN 10253-1	150	mm	150	mm	DIN EN 10253-1	P235GH/1.0305/A106	1	6/53	
KWS-150-D16-A-ROD.83	KWS	D16A	WELDING NECK FLANGE, RFFE/WN, PN 16, S235JRG2/1,0432/A105, DIN EN 1092-1	200	mm	200	mm	DIN EN 1092-1	S235JRG2/1,0432/A105	1	11	
KWS-150-D16-A-ROD.83	KWS	D16A	CONCENTRIC REDUCER, BW, P235GH/1.0305/A106, DIN EN 10253-1	200	mm	150	mm	DIN EN 10253-1	P235GH/1.0305/A106	1	6/5	
KWS-150-D16-A-ROD.87	KWS	D16A	CONCENTRIC REDUCER, BW, P235GH/1.0305/A106, DIN EN 10253-1	200	mm	150	mm	DIN EN 10253-1	P235GH/1.0305/A106	1	6/5	
KWS-150-D16-A-ROD.87	KWS	D16A	WELDING NECK FLANGE, RFFE/WN, PN 16, S235JRG2/1,0432/A105, DIN EN 1092-1	200	mm	200	mm	DIN EN 1092-1	S235JRG2/1,0432/A105	1	11	
KWS-150-D16-A-ROD.87	KWS	D16A	45 DEG ELBOW, 3D, BW, P235GH/1.0305/A106, DIN EN 10253-1	150	mm	150	mm	DIN EN 10253-1	P235GH/1.0305/A106	1	3/25	
KWS-150-D16-A-ROD.87	KWS	D16A	90 DEG ELBOW, 3D, BW, P235GH/1.0305/A106, DIN EN 10253-1	150	mm	150	mm	DIN EN 10253-1	P235GH/1.0305/A106	1	6/53	
KWS-150-D16-A-ROD.89	KWS	D16A	45 DEG ELBOW, 3D, BW, P235GH/1.0305/A106, DIN EN 10253-1	150	mm	150	mm	DIN EN 10253-1	P235GH/1.0305/A106	1	3/25	
KWS-150-D16-A-ROD.89	KWS	D16A	45 DEG ELBOW, 3D, BW, P235GH/1.0305/A106, DIN EN 10253-1	150	mm	150	mm	DIN EN 10253-1	P235GH/1.0305/A106	1	3/25	
KWS-150-D16-A-ROD.89	KWS	D16A	CONCENTRIC REDUCER, BW, P235GH/1.0305/A106, DIN EN 10253-1	200	mm	150	mm	DIN EN 10253-1	P235GH/1.0305/A106	1	6/5	
KWS-150-D16-A-ROD.89	KWS	D16A	45 DEG ELBOW, 3D, BW, P235GH/1.0305/A106, DIN EN 10253-1	150	mm	150	mm	DIN EN 10253-1	P235GH/1.0305/A106	1	3/25	
KWS-150-D16-A-ROD.89	KWS	D16A	WELDING NECK FLANGE, RFFE/WN, PN 16, S235JRG2/1,0432/A105, DIN EN 1092-1	200	mm	200	mm	DIN EN 1092-1	S235JRG2/1,0432/A105	1	11	
KWS-150-D16-A-ROD.89	KWS	D16A	90 DEG ELBOW, 3D, BW, P235GH/1.0305/A106, DIN EN 10253-1	150	mm	150	mm	DIN EN 10253-1	P235GH/1.0305/A106	1	6/53	
KWS-150-D16-A-ROD.91	KWS	D16A	90 DEG ELBOW, 3D, BW, P235GH/1.0305/A106, DIN EN 10253-1	150	mm	150	mm	DIN EN 10253-1	P235GH/1.0305/A106	1	6/53	

PIPE TAG	FLUID	SPECI.	TYPE	DN	UNITS	DN	UNITS	NORMATIVE	MATERIAL	QUANT.	HEIGHT	PRICE
KWS-150-D16-A-ROD.91	KWS	D16A	WELDING NECK FLANGE, RFFE/WN, PN 16, S235JRG2/1,0432/A105, DIN EN 1092-1	200	mm	200	mm	DIN EN 1092-1	S235JRG2/1,0432/A105	1	11	
KWS-150-D16-A-ROD.91	KWS	D16A	CONCENTRIC REDUCER, BW, P235GH/1.0305/A106, DIN EN 10253-1	200	mm	150	mm	DIN EN 10253-1	P235GH/1.0305/A106	1	6/5	
KWS-150-D16-A-ROD.91	KWS	D16A	90 DEG ELBOW, 3D, BW, P235GH/1.0305/A106, DIN EN 10253-1	150	mm	150	mm	DIN EN 10253-1	P235GH/1.0305/A106	1	6/53	
KWS-150-D16-A-ROD.91	KWS	D16A	45 DEG ELBOW, 3D, BW, P235GH/1.0305/A106, DIN EN 10253-1	150	mm	150	mm	DIN EN 10253-1	P235GH/1.0305/A106	1	3/25	
KWS-150-D16-A-ROD.91	KWS	D16A	CONCENTRIC REDUCER, BW, P235GH/1.0305/A106, DIN EN 10253-1	150	mm	100	mm	DIN EN 10253-1	P235GH/1.0305/A106	1	3/8	
KWS-150-D16-A-ROD.91	KWS	D16A	WELDING NECK FLANGE, RFFE/WN, PN 40, S235JRG2/1,0432/A105, DIN EN 1092-1	100	mm	100	mm	DIN EN 1092-1	S235JRG2/1,0432/A105	1	4/62	
KWS-150-D16-A-ROD.92	KWS	D16A	90 DEG ELBOW, 3D, BW, P235GH/1.0305/A106, DIN EN 10253-1	150	mm	150	mm	DIN EN 10253-1	P235GH/1.0305/A106	1	6/53	
KWS-150-D16-A-ROD.92	KWS	D16A	90 DEG ELBOW, 3D, BW, P235GH/1.0305/A106, DIN EN 10253-1	150	mm	150	mm	DIN EN 10253-1	P235GH/1.0305/A106	1	6/53	
KWS-150-D16-A-ROD.92	KWS	D16A	90 DEG ELBOW, 3D, BW, P235GH/1.0305/A106, DIN EN 10253-1	150	mm	150	mm	DIN EN 10253-1	P235GH/1.0305/A106	1	6/53	
KWS-150-D16-A-ROD.92	KWS	D16A	45 DEG ELBOW, 3D, BW, P235GH/1.0305/A106, DIN EN 10253-1	150	mm	150	mm	DIN EN 10253-1	P235GH/1.0305/A106	1	3/25	
KWS-150-D16-A-ROD.92	KWS	D16A	WELDING NECK FLANGE, RFFE/WN, PN 16, S235JRG2/1,0432/A105, DIN EN 1092-1	200	mm	200	mm	DIN EN 1092-1	S235JRG2/1,0432/A105	1	11	
KWS-150-D16-A-ROD.92	KWS	D16A	CONCENTRIC REDUCER, BW, P235GH/1.0305/A106, DIN EN 10253-1	200	mm	150	mm	DIN EN 10253-1	P235GH/1.0305/A106	1	6/5	
KWS-150-D16-A-ROD.92	KWS	D16A	WELDING NECK FLANGE, RFFE/WN, PN 40, S235JRG2/1,0432/A105, DIN EN 1092-1	150	mm	150	mm	DIN EN 1092-1	S235JRG2/1,0432/A105	1	7/75	
KWS-150-D16-A-ROD.96	KWS	D16A	CONCENTRIC REDUCER, BW, P235GH/1.0305/A106, DIN EN 10253-1	200	mm	150	mm	DIN EN 10253-1	P235GH/1.0305/A106	1	6/5	
KWS-150-D16-A-ROD.96	KWS	D16A	WELDING NECK FLANGE, RFFE/WN, PN 16, S235JRG2/1,0432/A105, DIN EN 1092-1	200	mm	200	mm	DIN EN 1092-1	S235JRG2/1,0432/A105	1	11	
KWS-150-D16-A-ROD.96	KWS	D16A	90 DEG ELBOW, 3D, BW, P235GH/1.0305/A106, DIN EN 10253-1	150	mm	150	mm	DIN EN 10253-1	P235GH/1.0305/A106	1	6/53	
KWS-150-D16-A-ROD.98	KWS	D16A	90 DEG ELBOW, 3D, BW, P235GH/1.0305/A106, DIN EN 10253-1	150	mm	150	mm	DIN EN 10253-1	P235GH/1.0305/A106	1	6/53	
KWS-150-D16-A-ROD.98	KWS	D16A	90 DEG ELBOW, 3D, BW, P235GH/1.0305/A106, DIN EN 10253-1	150	mm	150	mm	DIN EN 10253-1	P235GH/1.0305/A106	1	6/53	
KWS-150-D16-A-ROD.98	KWS	D16A	WELDING NECK FLANGE, RFFE/WN, PN 16, S235JRG2/1,0432/A105, DIN EN 1092-1	200	mm	200	mm	DIN EN 1092-1	S235JRG2/1,0432/A105	1	11	
KWS-150-D16-A-ROD.98	KWS	D16A	CONCENTRIC REDUCER, BW, P235GH/1.0305/A106, DIN EN 10253-1	200	mm	150	mm	DIN EN 10253-1	P235GH/1.0305/A106	1	6/5	
KWS-150-D16-A-ROD.99	KWS	D16A	90 DEG ELBOW, 3D, BW, P235GH/1.0305/A106, DIN EN 10253-1	150	mm	150	mm	DIN EN 10253-1	P235GH/1.0305/A106	1	6/53	
KWS-150-D16-A-ROD.99	KWS	D16A	90 DEG ELBOW, 3D, BW, P235GH/1.0305/A106, DIN EN 10253-1	150	mm	150	mm	DIN EN 10253-1	P235GH/1.0305/A106	1	6/53	
KWS-150-D16-A-ROD.99	KWS	D16A	45 DEG ELBOW, 3D, BW, P235GH/1.0305/A106, DIN EN 10253-1	150	mm	150	mm	DIN EN 10253-1	P235GH/1.0305/A106	1	3/25	
KWS-150-D16-A-ROD.99	KWS	D16A	CONCENTRIC REDUCER, BW, P235GH/1.0305/A106, DIN EN 10253-1	150	mm	100	mm	DIN EN 10253-1	P235GH/1.0305/A106	1	3/8	
KWS-150-D16-A-ROD.99	KWS	D16A	WELDING NECK FLANGE, RFFE/WN, PN 40, S235JRG2/1,0432/A105, DIN EN 1092-1	100	mm	100	mm	DIN EN 1092-1	S235JRG2/1,0432/A105	1	4/62	
KWS-150-D16-A-ROD.99	KWS	D16A	CONCENTRIC REDUCER, BW, P235GH/1.0305/A106, DIN EN 10253-1	200	mm	150	mm	DIN EN 10253-1	P235GH/1.0305/A106	1	6/5	
KWS-150-D16-A-ROD.99	KWS	D16A	WELDING NECK FLANGE, RFFE/WN, PN 16, S235JRG2/1,0432/A105, DIN EN 1092-1	200	mm	200	mm	DIN EN 1092-1	S235JRG2/1,0432/A105	1	11	
KWS-200-D16A-ROD.76	KWS	D16A	90 DEG ELBOW, 3D, BW, P235GH/1.0305/A106, DIN EN 10253-1	80	mm	80	mm	DIN EN 10253-1	P235GH/1.0305/A106	1	1/22	
KWS-200-D16A-ROD.76	KWS	D16A	WELDING NECK FLANGE, RFFE/WN, PN 16, S235JRG2/1,0432/A105, DIN EN 1092-1	80	mm	80	mm	DIN EN 1092-1	S235JRG2/1,0432/A105	1	3/7	
KWS-200-D16A-ROD.76	KWS	D16A	90 DEG ELBOW, 3D, BW, P235GH/1.0305/A106, DIN EN 10253-1	200	mm	200	mm	DIN EN 10253-1	P235GH/1.0305/A106	1	15/8	
KWS-200-D16A-ROD.76	KWS	D16A	90 DEG ELBOW, 3D, BW, P235GH/1.0305/A106, DIN EN 10253-1	200	mm	200	mm	DIN EN 10253-1	P235GH/1.0305/A106	1	15/8	
KWS-200-D16A-ROD.76	KWS	D16A	90 DEG ELBOW, 3D, BW, P235GH/1.0305/A106, DIN EN 10253-1	150	mm	150	mm	DIN EN 10253-1	P235GH/1.0305/A106	1	6/53	
KWS-200-D16A-ROD.76	KWS	D16A	90 DEG ELBOW, 3D, BW, P235GH/1.0305/A106, DIN EN 10253-1	200	mm	200	mm	DIN EN 10253-1	P235GH/1.0305/A106	1	15/8	
KWS-200-D16A-ROD.76	KWS	D16A	90 DEG ELBOW, 3D, BW, P235GH/1.0305/A106, DIN EN 10253-1	200	mm	200	mm	DIN EN 10253-1	P235GH/1.0305/A106	1	15/8	
KWS-200-D16A-ROD.76	KWS	D16A	WELDING NECK FLANGE, RFFE/WN, PN 16, S235JRG2/1,0432/A105, DIN EN 1092-1	150	mm	150	mm	DIN EN 1092-1	S235JRG2/1,0432/A105	1	7/75	
KWS-200-D16A-ROD.76	KWS	D16A	90 DEG ELBOW, 3D, BW, P235GH/1.0305/A106, DIN EN 10253-1	200	mm	200	mm	DIN EN 10253-1	P235GH/1.0305/A106	1	15/8	
KWS-200-D16A-ROD.76	KWS	D16A	90 DEG ELBOW, 3D, BW, P235GH/1.0305/A106, DIN EN 10253-1	200	mm	200	mm	DIN EN 10253-1	P235GH/1.0305/A106	1	15/8	
KWS-200-D16A-ROD.76	KWS	D16A	90 DEG ELBOW, 3D, BW, P235GH/1.0305/A106, DIN EN 10253-1	200	mm	200	mm	DIN EN 10253-1	P235GH/1.0305/A106	1	15/8	
KWS-200-D16A-ROD.76	KWS	D16A	WELDING NECK FLANGE, RFFE/WN, PN 16, S235JRG2/1,0432/A105, DIN EN 1092-1	150	mm	150	mm	DIN EN 1092-1	S235JRG2/1,0432/A105	1	7/75	
KWS-200-D16A-ROD.76	KWS	D16A	CONCENTRIC REDUCER, BW, P235GH/1.0305/A106, DIN EN 10253-1	200	mm	150	mm	DIN EN 10253-1	P235GH/1.0305/A106	1	6/5	
KWS-200-D16A-ROD.76	KWS	D16A	90 DEG ELBOW, 3D, BW, P235GH/1.0305/A106, DIN EN 10253-1	200	mm	200	mm	DIN EN 10253-1	P235GH/1.0305/A106	1	15/8	
KWS-200-D16A-ROD.76	KWS	D16A	90 DEG ELBOW, 3D, BW, P235GH/1.0305/A106, DIN EN 10253-1	200	mm	200	mm	DIN EN 10253-1	P235GH/1.0305/A106	1	15/8	
KWS-200-D16A-ROD.76	KWS	D16A	PLAIN FLANGE, FFFE/WN, PN 16, S235JRG2/1,0432/A105, DIN EN 1092-1	200	mm	200	mm	DIN EN 1092-1	S235JRG2/1,0432/A105	1	9/85	
KWS-200-D16A-ROD.76	KWS	D16A	TEE,BW, P235GH/1.0305/A106, DIN EN 10253-1	200	mm	200	mm	DIN EN 10253-1	P235GH/1.0305/A106	1	41/36762414	
KWS-200-D16A-ROD.76	KWS	D16A	PLAIN FLANGE, FFFE/WN, PN 16, S235JRG2/1,0432/A105, DIN EN 1092-1	200	mm	200	mm	DIN EN 1092-1	S235JRG2/1,0432/A105	1	9/85	
KWS-200-D16A-ROD.76	KWS	D16A	PLAIN FLANGE, FFFE/WN, PN 16, S235JRG2/1,0432/A105, DIN EN 1092-1	200	mm	200	mm	DIN EN 1092-1	S235JRG2/1,0432/A105	1	9/85	
KWS-200-D16A-ROD.76	KWS	D16A	TEE,BW, P235GH/1.0305/A106, DIN EN 10253-1	200	mm	200	mm	DIN EN 10253-1	P235GH/1.0305/A106	1	41/36762414	
KWS-200-D16A-ROD.76	KWS	D16A	PLAIN FLANGE, FFFE/WN, PN 16, S235JRG2/1,0432/A105, DIN EN 1092-1	200	mm	200	mm	DIN EN 1092-1	S235JRG2/1,0432/A105	1	9/85	
KWS-200-D16A-ROD.76	KWS	D16A	PLAIN FLANGE, FFFE/WN, PN 16, S235JRG2/1,0432/A105, DIN EN 1092-1	200	mm	200	mm	DIN EN 1092-1	S235JRG2/1,0432/A105	1	9/85	
KWS-200-D16A-ROD.76	KWS	D16A	PLAIN FLANGE, FFFE/WN, PN 16, S235JRG2/1,0432/A105, DIN EN 1092-1	200	mm	200	mm	DIN EN 1092-1	S235JRG2/1,0432/A105	1	9/85	
KWS-200-D16A-ROD.76	KWS	D16A	PLAIN FLANGE, FFFE/WN, PN 16, S235JRG2/1,0432/A105, DIN EN 1092-1	200	mm	200	mm	DIN EN 1092-1	S235JRG2/1,0432/A105	1	9/85	
KWS-200-D16A-ROD.76	KWS	D16A	90 DEG ELBOW, 3D, BW, P235GH/1.0305/A106, DIN EN 10253-1	200	mm	200	mm	DIN EN 10253-1	P235GH/1.0305/A106	1	15/8	
KWS-200-D16A-ROD.76	KWS	D16A	45 DEG ELBOW, 3D, BW, P235GH/1.0305/A106, DIN EN 10253-1	200	mm	200	mm	DIN EN 10253-1	P235GH/1.0305/A106	1	7/9	
KWS-200-D16A-ROD.81	KWS	D16A	45 DEG ELBOW, 3D, BW, P235GH/1.0305/A106, DIN EN 10253-1	200	mm	200	mm	DIN EN 10253-1	P235GH/1.0305/A106	1	7/9	
KWS-200-D16A-ROD.81	KWS	D16A	45 DEG ELBOW, 3D, BW, P235GH/1.0305/A106, DIN EN 10253-1	200	mm	200	mm	DIN EN 10253-1	P235GH/1.0305/A106	1	7/9	
KWS-200-D16A-ROD.81	KWS	D16A	90 DEG ELBOW, 3D, BW, P235GH/1.0305/A106, DIN EN 10253-1	200	mm	200	mm	DIN EN 10253-1	P235GH/1.0305/A106	1	15/8	
KWS-200-D16A-ROD.81	KWS	D16A	45 DEG ELBOW, 3D, BW, P235GH/1.0305/A106, DIN EN 10253-1	200	mm	200	mm	DIN EN 10253-1	P235GH/1.0305/A106	1	7/9	
KWS-200-D16A-ROD.81	KWS	D16A	90 DEG ELBOW, 3D, BW, P235GH/1.0305/A106, DIN EN 10253-1	200	mm	200	mm	DIN EN 10253-1	P235GH/1.0305/A106	1	15/8	
KWS-200-D16A-ROD.81	KWS	D16A	90 DEG ELBOW, 3D, BW, P235GH/1.0305/A106, DIN EN 10253-1	200	mm	200	mm	DIN EN 10253-1	P235GH/1.0305/A106	1	15/8	
KWS-200-D16A-ROD.81	KWS	D16A	PLAIN FLANGE, FFFE/WN, PN 16, S235JRG2/1,0432/A105, DIN EN 1092-1	200	mm	200	mm	DIN EN 1092-1	S235JRG2/1,0432/A105	1	9/85	
KWS-200-D16A-ROD.81	KWS	D16A	PLAIN FLANGE, FFFE/WN, PN 16, S235JRG2/1,0432/A105, DIN EN 1092-1	200	mm	200	mm	DIN EN 1092-1	S235JRG2/1,0432/A105	1	9/85	
KWS-200-D16A-ROD.81	KWS	D16A	45 DEG ELBOW, 3D, BW, P235GH/1.0305/A106, DIN EN 10253-1	200	mm	200	mm	DIN EN 10253-1	P235GH/1.0305/A106	1	7/9	
KWS-200-D16A-ROD.81	KWS	D16A	PLAIN FLANGE, FFFE/WN, PN 16, S235JRG2/1,0432/A105, DIN EN 1092-1	200	mm	200	mm	DIN EN 1092-1	S235JRG2/1,0432/A105	1	9/85	
KWS-200-D16A-ROD.81	KWS	D16A	90 DEG ELBOW, 3D, BW, P235GH/1.0305/A106, DIN EN 10253-1	200	mm	200	mm	DIN EN 10253-1	P235GH/1.0305/A106	1	15/8	
KWS-200-D16A-ROD.81	KWS	D16A	PLAIN FLANGE, FFFE/WN, PN 16, S235JRG2/1,0432/A105, DIN EN 1092-1	200	mm	200	mm	DIN EN 1092-1	S235JRG2/1,0432/A105	1	9/85	
KWS-200-D16A-ROD.81	KWS	D16A	PLAIN FLANGE, FFFE/WN, PN 16, S235JRG2/1,0432/A105, DIN EN 1092-1	200	mm	200	mm	DIN EN 1092-1	S235JRG2/1,0432/A105	1	9/85	
KWS-200-D16A-ROD.81	KWS	D16A	PLAIN FLANGE, FFFE/WN, PN 16, S235JRG2/1,0432/A105, DIN EN 1092-1	200	mm	200	mm	DIN EN 1092-1	S235JRG2/1,0432/A105	1	9/85	
KWS-200-D16A-ROD.81	KWS	D16A	45 DEG ELBOW, 3D, BW, P235GH/1.0305/A106, DIN EN 10253-1	200	mm	200	mm	DIN EN 10253-1	P235GH/1.0305/A106	1	7/9	
KWS-25-D16A-ROD.77	KWS	D16A	WELDING NECK FLANGE, RFFE/WN, PN 16, S235JRG2/1,0432/A105, DIN EN 1092-1	25	mm	25	mm	DIN EN 1092-1	S235JRG2/1,0432/A105	1	1/14	
KWS-25-D16A-ROD.77	KWS	D16A	WELDING NECK FLANGE, RFFE/WN, PN 16, S235JRG2/1,0432/A105, DIN EN 1092-1	25	mm	25	mm	DIN EN 1092-1	S235JRG2/1,0432/A105	1	1/14	
KWS-25-D16A-ROD.77	KWS	D16A	90 DEG ELBOW, CL 3000, SW, ASTM A105, ASME B16.11	25	mm	25	mm	ASME B16.11	ASTM A105	1	0/52	

PIPE TAG	FLUID	SPECI.	TYPE	DN	UNITS	DN	UNITS	NORMATIVE	MATERIAL	QUANT.	HEIGHT	PRICE
KWS-25-D16A-ROD.77	KWS	D16A	90 DEG ELBOW, CL 3000, SW, ASTM A105, ASME B16.11	25	mm	25	mm	ASME B16.11	ASTM A105	1	0/52	
KWS-25-D16A-ROD.77	KWS	D16A	90 DEG ELBOW, CL 3000, SW, ASTM A105, ASME B16.11	25	mm	25	mm	ASME B16.11	ASTM A105	1	0/52	
KWS-25-D16A-ROD.77	KWS	D16A	PLAIN FLANGE, FFFE/WN, PN 16, S235JRG2/1,0432/A105, DIN EN 1092-1	25	mm	25	mm	DIN EN 1092-1	S235JRG2/1,0432/A105	1	1/14	
KWS-25-D16A-ROD.77	KWS	D16A	SOCKOLET, CL3000, SW, ASTM-A105, ASME B16.11	200	mm	25	mm	ASME B16.11	ASTM-A105	1	0/27	
KWS-25-D16-A-ROD.84	KWS	D16A	90 DEG ELBOW, CL 3000, SW, ASTM A105, ASME B16.11	25	mm	25	mm	ASME B16.11	ASTM A105	1	0/52	
KWS-25-D16-A-ROD.84	KWS	D16A	SOCKOLET, CL3000, SW, ASTM-A105, ASME B16.11	150	mm	25	mm	ASME B16.11	ASTM-A105	1	0/27	
KWS-25-D16-A-ROD.84	KWS	D16A	90 DEG ELBOW, CL 3000, SW, ASTM A105, ASME B16.11	25	mm	25	mm	ASME B16.11	ASTM A105	1	0/52	
KWS-25-D16-A-ROD.84	KWS	D16A	WELDING NECK FLANGE, RFFE/WN, PN 16, S235JRG2/1,0432/A105, DIN EN 1092-1	25	mm	25	mm	DIN EN 1092-1	S235JRG2/1,0432/A105	1	1/14	
KWS-25-D16-A-ROD.84	KWS	D16A	WELDING NECK FLANGE, RFFE/WN, PN 16, S235JRG2/1,0432/A105, DIN EN 1092-1	25	mm	25	mm	DIN EN 1092-1	S235JRG2/1,0432/A105	1	1/14	
KWS-25-D16-A-ROD.84	KWS	D16A	90 DEG ELBOW, CL 3000, SW, ASTM A105, ASME B16.11	25	mm	25	mm	ASME B16.11	ASTM A105	1	0/52	
KWS-25-D16-A-ROD.88	KWS	D16A	90 DEG ELBOW, CL 3000, SW, ASTM A105, ASME B16.11	25	mm	25	mm	ASME B16.11	ASTM A105	1	0/52	
KWS-25-D16-A-ROD.88	KWS	D16A	90 DEG ELBOW, CL 3000, SW, ASTM A105, ASME B16.11	25	mm	25	mm	ASME B16.11	ASTM A105	1	0/52	
KWS-25-D16-A-ROD.88	KWS	D16A	90 DEG ELBOW, CL 3000, SW, ASTM A105, ASME B16.11	25	mm	25	mm	ASME B16.11	ASTM A105	1	0/52	
KWS-25-D16-A-ROD.88	KWS	D16A	90 DEG ELBOW, CL 3000, SW, ASTM A105, ASME B16.11	25	mm	25	mm	ASME B16.11	ASTM A105	1	0/52	
KWS-25-D16-A-ROD.88	KWS	D16A	90 DEG ELBOW, CL 3000, SW, ASTM A105, ASME B16.11	25	mm	25	mm	ASME B16.11	ASTM A105	1	0/52	
KWS-25-D16-A-ROD.88	KWS	D16A	90 DEG ELBOW, CL 3000, SW, ASTM A105, ASME B16.11	25	mm	25	mm	ASME B16.11	ASTM A105	1	0/52	
KWS-25-D16-A-ROD.88	KWS	D16A	WELDING NECK FLANGE, RFFE/WN, PN 16, S235JRG2/1,0432/A105, DIN EN 1092-1	25	mm	25	mm	DIN EN 1092-1	S235JRG2/1,0432/A105	1	1/14	
KWS-25-D16-A-ROD.88	KWS	D16A	WELDING NECK FLANGE, RFFE/WN, PN 16, S235JRG2/1,0432/A105, DIN EN 1092-1	25	mm	25	mm	DIN EN 1092-1	S235JRG2/1,0432/A105	1	1/14	
KWS-25-D16-A-ROD.88	KWS	D16A	SOCKOLET, CL3000, SW, ASTM-A105, ASME B16.11	300	mm	25	mm	ASME B16.11	ASTM-A105	1	0/27	
KWS-25-D16-A-ROD.97	KWS	D16A	SOCKOLET, CL3000, SW, ASTM-A105, ASME B16.11	150	mm	25	mm	ASME B16.11	ASTM-A105	1	0/27	
KWS-25-D16-A-ROD.97	KWS	D16A	WELDING NECK FLANGE, RFFE/WN, PN 16, S235JRG2/1,0432/A105, DIN EN 1092-1	25	mm	25	mm	DIN EN 1092-1	S235JRG2/1,0432/A105	1	1/14	
KWS-25-D16-A-ROD.97	KWS	D16A	90 DEG ELBOW, CL 3000, SW, ASTM A105, ASME B16.11	25	mm	25	mm	ASME B16.11	ASTM A105	1	0/52	
KWS-25-D16-A-ROD.97	KWS	D16A	WELDING NECK FLANGE, RFFE/WN, PN 16, S235JRG2/1,0432/A105, DIN EN 1092-1	25	mm	25	mm	DIN EN 1092-1	S235JRG2/1,0432/A105	1	1/14	
KWS-25-D16-A-ROD.97	KWS	D16A	WELDING NECK FLANGE, RFFE/WN, PN 16, S235JRG2/1,0432/A105, DIN EN 1092-1	25	mm	25	mm	DIN EN 1092-1	S235JRG2/1,0432/A105	1	1/14	
KWS-300-D16A-ROD.80	KWS	D16A	90 DEG ELBOW, 3D, BW, P235GH/1.0305/A106, DIN EN 10253-1	300	mm	300	mm	DIN EN 10253-1	P235GH/1.0305/A106	1	39/8	
KWS-300-D16A-ROD.80	KWS	D16A	REDUCING BRANCH TEE, BW, P235GH/1.0305/A106, DIN EN 10253-1	300	mm	200	mm	DIN EN 10253-1	P235GH/1.0305/A106	1	56	
KWS-300-D16A-ROD.80	KWS	D16A	CAP, BW, P235GH/1.0305/A106, DIN EN 10253-1	300	mm	0	mm	DIN EN 10253-1	P235GH/1.0305/A106	1	14	
KWS-300-D16A-ROD.80	KWS	D16A	REDUCING BRANCH TEE, BW, P235GH/1.0305/A106, DIN EN 10253-1	300	mm	200	mm	DIN EN 10253-1	P235GH/1.0305/A106	1	56	
KWS-40-D16A-ROD.104	KWS	D16A	WELDING NECK FLANGE, RFFE/WN, PN 16, S235JRG2/1,0432/A105, DIN EN 1092-1	40	mm	40	mm	DIN EN 1092-1	S235JRG2/1,0432/A105	1	1/86	
KWS-40-D16A-ROD.104	KWS	D16A	90 DEG ELBOW, CL 3000, SW, ASTM A105, ASME B16.11	40	mm	40	mm	ASME B16.11	ASTM A105	1	1/09	
KWS-40-D16A-ROD.104	KWS	D16A	PLAIN FLANGE, FFFE/WN, PN 16, S235JRG2/1,0432/A105, DIN EN 1092-1	40	mm	40	mm	DIN EN 1092-1	S235JRG2/1,0432/A105	1	1/86	
KWS-40-D16A-ROD.104	KWS	D16A	90 DEG ELBOW, CL 3000, SW, ASTM A105, ASME B16.11	40	mm	40	mm	ASME B16.11	ASTM A105	1	1/09	
KWS-40-D16A-ROD.104	KWS	D16A	90 DEG ELBOW, CL 3000, SW, ASTM A105, ASME B16.11	40	mm	40	mm	ASME B16.11	ASTM A105	1	1/09	
KWS-40-D16A-ROD.104	KWS	D16A	90 DEG ELBOW, CL 3000, SW, ASTM A105, ASME B16.11	40	mm	40	mm	ASME B16.11	ASTM A105	1	1/09	
KWS-40-D16A-ROD.106	KWS	D16A	90 DEG ELBOW, CL 3000, SW, ASTM A105, ASME B16.11	40	mm	40	mm	ASME B16.11	ASTM A105	1	1/09	
KWS-40-D16A-ROD.106	KWS	D16A	PLAIN FLANGE, FFFE/WN, PN 16, S235JRG2/1,0432/A105, DIN EN 1092-1	40	mm	40	mm	DIN EN 1092-1	S235JRG2/1,0432/A105	1	1/86	
KWS-40-D16A-ROD.106	KWS	D16A	WELDING NECK FLANGE, RFFE/WN, PN 16, S235JRG2/1,0432/A105, DIN EN 1092-1	40	mm	40	mm	DIN EN 1092-1	S235JRG2/1,0432/A105	1	1/86	
KWS-40-D16A-ROD.106	KWS	D16A	90 DEG ELBOW, CL 3000, SW, ASTM A105, ASME B16.11	40	mm	40	mm	ASME B16.11	ASTM A105	1	1/09	
KWS-40-D16A-ROD.106	KWS	D16A	90 DEG ELBOW, CL 3000, SW, ASTM A105, ASME B16.11	40	mm	40	mm	ASME B16.11	ASTM A105	1	1/09	
KWS-40-D16A-ROD.108	KWS	D16A	WELDING NECK FLANGE, RFFE/WN, PN 16, S235JRG2/1,0432/A105, DIN EN 1092-1	40	mm	40	mm	DIN EN 1092-1	S235JRG2/1,0432/A105	1	1/86	
KWS-40-D16A-ROD.108	KWS	D16A	90 DEG ELBOW, CL 3000, SW, ASTM A105, ASME B16.11	40	mm	40	mm	ASME B16.11	ASTM A105	1	1/09	
KWS-40-D16A-ROD.108	KWS	D16A	90 DEG ELBOW, CL 3000, SW, ASTM A105, ASME B16.11	40	mm	40	mm	ASME B16.11	ASTM A105	1	1/09	
KWS-40-D16A-ROD.108	KWS	D16A	90 DEG ELBOW, CL 3000, SW, ASTM A105, ASME B16.11	40	mm	40	mm	ASME B16.11	ASTM A105	1	1/09	
KWS-40-D16A-ROD.108	KWS	D16A	PLAIN FLANGE, FFFE/WN, PN 16, S235JRG2/1,0432/A105, DIN EN 1092-1	40	mm	40	mm	DIN EN 1092-1	S235JRG2/1,0432/A105	1	1/86	
KWS-40-D16A-ROD.110	KWS	D16A	PLAIN FLANGE, FFFE/WN, PN 16, S235JRG2/1,0432/A105, DIN EN 1092-1	40	mm	40	mm	DIN EN 1092-1	S235JRG2/1,0432/A105	1	1/86	
KWS-40-D16A-ROD.110	KWS	D16A	WELDING NECK FLANGE, RFFE/WN, PN 16, S235JRG2/1,0432/A105, DIN EN 1092-1	40	mm	40	mm	DIN EN 1092-1	S235JRG2/1,0432/A105	1	1/86	
KWS-40-D16A-ROD.110	KWS	D16A	90 DEG ELBOW, CL 3000, SW, ASTM A105, ASME B16.11	40	mm	40	mm	ASME B16.11	ASTM A105	1	1/09	
KWS-40-D16A-ROD.110	KWS	D16A	90 DEG ELBOW, CL 3000, SW, ASTM A105, ASME B16.11	40	mm	40	mm	ASME B16.11	ASTM A105	1	1/09	
KWS-40-D16A-ROD.110	KWS	D16A	45 DEG ELBOW, CL 3000, SW, ASTM A105, ASME B16.11	40	mm	40	mm	ASME B16.11	ASTM A105	1	0/9	
KWS-40-D16A-ROD.110	KWS	D16A	90 DEG ELBOW, CL 3000, SW, ASTM A105, ASME B16.11	40	mm	40	mm	ASME B16.11	ASTM A105	1	1/09	
KWS-40-D16A-ROD.110	KWS	D16A	90 DEG ELBOW, CL 3000, SW, ASTM A105, ASME B16.11	40	mm	40	mm	ASME B16.11	ASTM A105	1	1/09	
KWS-40-D16A-ROD.112	KWS	D16A	PLAIN FLANGE, FFFE/WN, PN 16, S235JRG2/1,0432/A105, DIN EN 1092-1	40	mm	40	mm	DIN EN 1092-1	S235JRG2/1,0432/A105	1	1/86	
KWS-40-D16A-ROD.112	KWS	D16A	WELDING NECK FLANGE, RFFE/WN, PN 16, S235JRG2/1,0432/A105, DIN EN 1092-1	40	mm	40	mm	DIN EN 1092-1	S235JRG2/1,0432/A105	1	1/86	
KWS-40-D16A-ROD.112	KWS	D16A	90 DEG ELBOW, CL 3000, SW, ASTM A105, ASME B16.11	40	mm	40	mm	ASME B16.11	ASTM A105	1	1/09	
KWS-40-D16A-ROD.112	KWS	D16A	90 DEG ELBOW, CL 3000, SW, ASTM A105, ASME B16.11	40	mm	40	mm	ASME B16.11	ASTM A105	1	1/09	
KWS-40-D16A-ROD.112	KWS	D16A	90 DEG ELBOW, CL 3000, SW, ASTM A105, ASME B16.11	40	mm	40	mm	ASME B16.11	ASTM A105	1	1/09	
KWS-50-D16A-ROD.105	KWS	D16A	PLAIN FLANGE, FFFE/WN, PN 16, S235JRG2/1,0432/A105, DIN EN 1092-1	50	mm	50	mm	DIN EN 1092-1	S235JRG2/1,0432/A105	1	2/53	
KWS-50-D16A-ROD.105	KWS	D16A	90 DEG ELBOW, CL 3000, SW, ASTM A105, ASME B16.11	50	mm	50	mm	ASME B16.11	ASTM A105	1	1/77	
KWS-50-D16A-ROD.105	KWS	D16A	WELDING NECK FLANGE, RFFE/WN, PN 16, S235JRG2/1,0432/A105, DIN EN 1092-1	50	mm	50	mm	DIN EN 1092-1	S235JRG2/1,0432/A105	1	2/53	
KWS-50-D16A-ROD.105	KWS	D16A	90 DEG ELBOW, CL 3000, SW, ASTM A105, ASME B16.11	50	mm	50	mm	ASME B16.11	ASTM A105	1	1/77	
KWS-50-D16A-ROD.105	KWS	D16A	45 DEG ELBOW, CL 3000, SW, ASTM A105, ASME B16.11	50	mm	50	mm	ASME B16.11	ASTM A105	1	1/36	
KWS-50-D16A-ROD.105	KWS	D16A	90 DEG ELBOW, CL 3000, SW, ASTM A105, ASME B16.11	50	mm	50	mm	ASME B16.11	ASTM A105	1	1/77	
KWS-50-D16A-ROD.105	KWS	D16A	90 DEG ELBOW, CL 3000, SW, ASTM A105, ASME B16.11	50	mm	50	mm	ASME B16.11	ASTM A105	1	1/77	
KWS-50-D16A-ROD.105	KWS	D16A	90 DEG ELBOW, CL 3000, SW, ASTM A105, ASME B16.11	50	mm	50	mm	ASME B16.11	ASTM A105	1	1/77	
KWS-50-D16A-ROD.105	KWS	D16A	45 DEG ELBOW, CL 3000, SW, ASTM A105, ASME B16.11	50	mm	50	mm	ASME B16.11	ASTM A105	1	1/36	
KWS-50-D16A-ROD.105	KWS	D16A	90 DEG ELBOW, CL 3000, SW, ASTM A105, ASME B16.11	50	mm	50	mm	ASME B16.11	ASTM A105	1	1/77	

PIPE TAG	FLUID	SPECI.	TYPE	DN	UNITS	DN	UNITS	NORMATIVE	MATERIAL	QUANT.	HEIGHT	PRICE
KWS-50-D16A-ROD.107	KWS	D16A	90 DEG ELBOW, CL 3000, SW, ASTM A105, ASME B16.11	50	mm	50	mm	ASME B16.11	ASTM A105	1	1/77	
KWS-50-D16A-ROD.107	KWS	D16A	90 DEG ELBOW, CL 3000, SW, ASTM A105, ASME B16.11	50	mm	50	mm	ASME B16.11	ASTM A105	1	1/77	
KWS-50-D16A-ROD.107	KWS	D16A	90 DEG ELBOW, CL 3000, SW, ASTM A105, ASME B16.11	50	mm	50	mm	ASME B16.11	ASTM A105	1	1/77	
KWS-50-D16A-ROD.107	KWS	D16A	WELDING NECK FLANGE, RFFE/WN, PN 16, S235JRG2/1,0432/A105, DIN EN 1092-1	50	mm	50	mm	DIN EN 1092-1	S235JRG2/1,0432/A105	1	2/53	
KWS-50-D16A-ROD.107	KWS	D16A	PLAIN FLANGE, FFFE/WN, PN 16, S235JRG2/1,0432/A105, DIN EN 1092-1	50	mm	50	mm	DIN EN 1092-1	S235JRG2/1,0432/A105	1	2/53	
KWS-50-D16A-ROD.109	KWS	D16A	90 DEG ELBOW, CL 3000, SW, ASTM A105, ASME B16.11	50	mm	50	mm	ASME B16.11	ASTM A105	1	1/77	
KWS-50-D16A-ROD.109	KWS	D16A	90 DEG ELBOW, CL 3000, SW, ASTM A105, ASME B16.11	50	mm	50	mm	ASME B16.11	ASTM A105	1	1/77	
KWS-50-D16A-ROD.109	KWS	D16A	90 DEG ELBOW, CL 3000, SW, ASTM A105, ASME B16.11	50	mm	50	mm	ASME B16.11	ASTM A105	1	1/77	
KWS-50-D16A-ROD.109	KWS	D16A	WELDING NECK FLANGE, RFFE/WN, PN 16, S235JRG2/1,0432/A105, DIN EN 1092-1	50	mm	50	mm	DIN EN 1092-1	S235JRG2/1,0432/A105	1	2/53	
KWS-50-D16A-ROD.109	KWS	D16A	PLAIN FLANGE, FFFE/WN, PN 16, S235JRG2/1,0432/A105, DIN EN 1092-1	50	mm	50	mm	DIN EN 1092-1	S235JRG2/1,0432/A105	1	2/53	
KWS-50-D16A-ROD.111	KWS	D16A	PLAIN FLANGE, FFFE/WN, PN 16, S235JRG2/1,0432/A105, DIN EN 1092-1	50	mm	50	mm	DIN EN 1092-1	S235JRG2/1,0432/A105	1	2/53	
KWS-50-D16A-ROD.111	KWS	D16A	90 DEG ELBOW, CL 3000, SW, ASTM A105, ASME B16.11	50	mm	50	mm	ASME B16.11	ASTM A105	1	1/77	
KWS-50-D16A-ROD.111	KWS	D16A	90 DEG ELBOW, CL 3000, SW, ASTM A105, ASME B16.11	50	mm	50	mm	ASME B16.11	ASTM A105	1	1/77	
KWS-50-D16A-ROD.111	KWS	D16A	90 DEG ELBOW, CL 3000, SW, ASTM A105, ASME B16.11	50	mm	50	mm	ASME B16.11	ASTM A105	1	1/77	
KWS-50-D16A-ROD.111	KWS	D16A	WELDING NECK FLANGE, RFFE/WN, PN 16, S235JRG2/1,0432/A105, DIN EN 1092-1	50	mm	50	mm	DIN EN 1092-1	S235JRG2/1,0432/A105	1	2/53	
KWS-50-D16A-ROD.113	KWS	D16A	PLAIN FLANGE, FFFE/WN, PN 16, S235JRG2/1,0432/A105, DIN EN 1092-1	50	mm	50	mm	DIN EN 1092-1	S235JRG2/1,0432/A105	1	2/53	
KWS-50-D16A-ROD.113	KWS	D16A	90 DEG ELBOW, CL 3000, SW, ASTM A105, ASME B16.11	50	mm	50	mm	ASME B16.11	ASTM A105	1	1/77	
KWS-50-D16A-ROD.113	KWS	D16A	90 DEG ELBOW, CL 3000, SW, ASTM A105, ASME B16.11	50	mm	50	mm	ASME B16.11	ASTM A105	1	1/77	
KWS-50-D16A-ROD.113	KWS	D16A	WELDING NECK FLANGE, RFFE/WN, PN 16, S235JRG2/1,0432/A105, DIN EN 1092-1	50	mm	50	mm	DIN EN 1092-1	S235JRG2/1,0432/A105	1	2/53	
KWS-50-D16A-ROD.114	KWS	D16A	90 DEG ELBOW, CL 3000, SW, ASTM A105, ASME B16.11	50	mm	50	mm	ASME B16.11	ASTM A105	1	1/77	
KWS-50-D16A-ROD.114	KWS	D16A	90 DEG ELBOW, CL 3000, SW, ASTM A105, ASME B16.11	50	mm	50	mm	ASME B16.11	ASTM A105	1	1/77	
KWS-50-D16A-ROD.114	KWS	D16A	90 DEG ELBOW, CL 3000, SW, ASTM A105, ASME B16.11	50	mm	50	mm	ASME B16.11	ASTM A105	1	1/77	
KWS-50-D16A-ROD.114	KWS	D16A	PLAIN FLANGE, FFFE/WN, PN 16, S235JRG2/1,0432/A105, DIN EN 1092-1	50	mm	50	mm	DIN EN 1092-1	S235JRG2/1,0432/A105	1	2/53	
KWS-50-D16A-ROD.114	KWS	D16A	90 DEG ELBOW, CL 3000, SW, ASTM A105, ASME B16.11	50	mm	50	mm	ASME B16.11	ASTM A105	1	1/77	
KWS-50-D16A-ROD.114	KWS	D16A	PLAIN FLANGE, FFFE/WN, PN 16, S235JRG2/1,0432/A105, DIN EN 1092-1	50	mm	50	mm	DIN EN 1092-1	S235JRG2/1,0432/A105	1	2/53	
KWS-50-D16A-ROD.114	KWS	D16A	WELDING NECK FLANGE, RFFE/WN, PN 16, S235JRG2/1,0432/A105, DIN EN 1092-1	50	mm	50	mm	DIN EN 1092-1	S235JRG2/1,0432/A105	1	2/53	
KWS-50-D16A-ROD.115	KWS	D16A	90 DEG ELBOW, CL 3000, SW, ASTM A105, ASME B16.11	50	mm	50	mm	ASME B16.11	ASTM A105	1	1/77	
KWS-50-D16A-ROD.115	KWS	D16A	90 DEG ELBOW, CL 3000, SW, ASTM A105, ASME B16.11	50	mm	50	mm	ASME B16.11	ASTM A105	1	1/77	
KWS-50-D16A-ROD.115	KWS	D16A	90 DEG ELBOW, CL 3000, SW, ASTM A105, ASME B16.11	50	mm	50	mm	ASME B16.11	ASTM A105	1	1/77	
KWS-50-D16A-ROD.115	KWS	D16A	WELDING NECK FLANGE, RFFE/WN, PN 16, S235JRG2/1,0432/A105, DIN EN 1092-1	50	mm	50	mm	DIN EN 1092-1	S235JRG2/1,0432/A105	1	2/53	
KWS-50-D16A-ROD.115	KWS	D16A	PLAIN FLANGE, FFFE/WN, PN 16, S235JRG2/1,0432/A105, DIN EN 1092-1	50	mm	50	mm	DIN EN 1092-1	S235JRG2/1,0432/A105	1	2/53	
KWS-50-D16A-ROD.116	KWS	D16A	90 DEG ELBOW, CL 3000, SW, ASTM A105, ASME B16.11	50	mm	50	mm	ASME B16.11	ASTM A105	1	1/77	
KWS-50-D16A-ROD.116	KWS	D16A	90 DEG ELBOW, CL 3000, SW, ASTM A105, ASME B16.11	50	mm	50	mm	ASME B16.11	ASTM A105	1	1/77	
KWS-50-D16A-ROD.116	KWS	D16A	90 DEG ELBOW, CL 3000, SW, ASTM A105, ASME B16.11	50	mm	50	mm	ASME B16.11	ASTM A105	1	1/77	
KWS-50-D16A-ROD.116	KWS	D16A	WELDING NECK FLANGE, RFFE/WN, PN 16, S235JRG2/1,0432/A105, DIN EN 1092-1	50	mm	50	mm	DIN EN 1092-1	S235JRG2/1,0432/A105	1	2/53	
KWS-50-D16A-ROD.116	KWS	D16A	PLAIN FLANGE, FFFE/WN, PN 16, S235JRG2/1,0432/A105, DIN EN 1092-1	50	mm	50	mm	DIN EN 1092-1	S235JRG2/1,0432/A105	1	2/53	
KWS-50-D16A-ROD.117	KWS	D16A	90 DEG ELBOW, CL 3000, SW, ASTM A105, ASME B16.11	50	mm	50	mm	ASME B16.11	ASTM A105	1	1/77	
KWS-50-D16A-ROD.117	KWS	D16A	90 DEG ELBOW, CL 3000, SW, ASTM A105, ASME B16.11	50	mm	50	mm	ASME B16.11	ASTM A105	1	1/77	
KWS-50-D16A-ROD.117	KWS	D16A	90 DEG ELBOW, CL 3000, SW, ASTM A105, ASME B16.11	50	mm	50	mm	ASME B16.11	ASTM A105	1	1/77	
KWS-50-D16A-ROD.117	KWS	D16A	WELDING NECK FLANGE, RFFE/WN, PN 16, S235JRG2/1,0432/A105, DIN EN 1092-1	50	mm	50	mm	DIN EN 1092-1	S235JRG2/1,0432/A105	1	2/53	
KWS-50-D16A-ROD.117	KWS	D16A	PLAIN FLANGE, FFFE/WN, PN 16, S235JRG2/1,0432/A105, DIN EN 1092-1	50	mm	50	mm	DIN EN 1092-1	S235JRG2/1,0432/A105	1	2/53	
KWS-50-D16A-ROD.118	KWS	D16A	90 DEG ELBOW, CL 3000, SW, ASTM A105, ASME B16.11	50	mm	50	mm	ASME B16.11	ASTM A105	1	1/77	
KWS-50-D16A-ROD.118	KWS	D16A	WELDING NECK FLANGE, RFFE/WN, PN 16, S235JRG2/1,0432/A105, DIN EN 1092-1	50	mm	50	mm	DIN EN 1092-1	S235JRG2/1,0432/A105	1	2/53	
KWS-50-D16A-ROD.118	KWS	D16A	PLAIN FLANGE, FFFE/WN, PN 16, S235JRG2/1,0432/A105, DIN EN 1092-1	50	mm	50	mm	DIN EN 1092-1	S235JRG2/1,0432/A105	1	2/53	
KWS-50-D16A-ROD.118	KWS	D16A	90 DEG ELBOW, CL 3000, SW, ASTM A105, ASME B16.11	50	mm	50	mm	ASME B16.11	ASTM A105	1	1/77	
KWS-50-D16A-ROD.118	KWS	D16A	90 DEG ELBOW, CL 3000, SW, ASTM A105, ASME B16.11	50	mm	50	mm	ASME B16.11	ASTM A105	1	1/77	
KWS-50-D16A-ROD.118	KWS	D16A	90 DEG ELBOW, CL 3000, SW, ASTM A105, ASME B16.11	50	mm	50	mm	ASME B16.11	ASTM A105	1	1/77	
KWS-50-D16A-ROD.118	KWS	D16A	45 DEG ELBOW, CL 3000, SW, ASTM A105, ASME B16.11	50	mm	50	mm	ASME B16.11	ASTM A105	1	1/36	
KWS-50-D16A-ROD.118	KWS	D16A	90 DEG ELBOW, CL 3000, SW, ASTM A105, ASME B16.11	50	mm	50	mm	ASME B16.11	ASTM A105	1	1/77	

SCREW WATER

TYPE OF ELEMENTS	DESCRIPTION		BOLT DIAMETER	LENGTH	QUANTITY	PRICE
Bolts/Nut/Washer	B	HEX HEAD SCREW (ISO 4014) WITH 1 HEAVY HEX NUTS (ISO 4032) AND 1 FLAT WASHER (ISO 7089), 8.8 ZINC PLATED 60 mm	12 mm	60 mm	100	
Bolts/Nut/Washer	B	HEX HEAD SCREW (ISO 4014) WITH 1 HEAVY HEX NUTS (ISO 4032) AND 1 FLAT WASHER (ISO 7089), 8.8 ZINC PLATED 80 mm	16 mm	80 mm	100	
Bolts/Nut/Washer	B	HEX HEAD SCREW (ISO 4014) WITH 1 HEAVY HEX NUTS (ISO 4032) AND 1 FLAT WASHER (ISO 7089), 8.8 ZINC PLATED 90 mm	20 mm	90 mm	320	
Bolts/Nut/Washer	B	HEX HEAD SCREW (ISO 4014) WITH 1 HEAVY HEX NUTS (ISO 4032) AND 1 FLAT WASHER (ISO 7089), 8.8 ZINC PLATED 130 mm	16 mm	130 mm	100	
Bolts/Nut/Washer	B	HEX HEAD SCREW (ISO 4014) WITH 1 HEAVY HEX NUTS (ISO 4032) AND 1 FLAT WASHER (ISO 7089), 8.8 ZINC PLATED 140 mm	20 mm	140 mm	250	
Gaskets	G	GASKET, PN 16, COMPRESSION FIBRE WITH BONDING AGENT, 2MM THICKNESS	100 mm	2 mm	12	
Gaskets	G	GASKET, PN 16, COMPRESSION FIBRE WITH BONDING AGENT, 2MM THICKNESS	150 mm	2 mm	12	
Gaskets	G	GASKET, PN 16, COMPRESSION FIBRE WITH BONDING AGENT, 2MM THICKNESS	200 mm	2 mm	30	
Gaskets	G	GASKET, PN 16, COMPRESSION FIBRE WITH BONDING AGENT, 2MM THICKNESS	25 mm	2 mm	30	
Gaskets	G	GASKET, PN 16, COMPRESSION FIBRE WITH BONDING AGENT, 2MM THICKNESS	32 mm	2 mm	6	
Gaskets	G	GASKET, PN 16, COMPRESSION FIBRE WITH BONDING AGENT, 2MM THICKNESS	40 mm	2 mm	16	
Gaskets	G	GASKET, PN 16, COMPRESSION FIBRE WITH BONDING AGENT, 2MM THICKNESS	50 mm	2 mm	12	
Gaskets	G	GASKET, PN 16, COMPRESSION FIBRE WITH BONDING AGENT, 2MM THICKNESS	80 mm	2 mm	12	

PIPE WATER

PIPE TAG	TYPE OF FLUID	CONNECTION	SPECI.	DN	UNITS	THICKNESS(mm)	NORMATIVE	MATERIAL	LENGHT	WEIGHT (Kg)	PRICE
CWR-150-D16A-ROD.109	CWR	BE	D16A	150	MM	4,50 mm	DIN EN 10216-1 (DIN 2448) SEAMLESS	P235GH/1.0305/A106	903,6 mm	16/356	
CWR-150-D16A-ROD.109	CWR	PE	D16A	25	MM	3,25 mm	DIN EN 10255 (DIN 2440) SEAMLESS	P235GH/1.0305/A106	240 mm	0/586	
CWR-150-D16A-ROD.109	CWR	PE	D16A	15	MM	2,65 mm	DIN EN 10255 (DIN 2440) SEAMLESS	P235GH/1.0305/A106	120 mm	0/146	
CWR-150-D16A-ROD.109	CWR	PE	D16A	25	MM	3,25 mm	DIN EN 10255 (DIN 2440) SEAMLESS	P235GH/1.0305/A106	240 mm	0/586	
CWR-150-D16A-ROD.109	CWR	BE	D16A	150	MM	4,50 mm	DIN EN 10216-1 (DIN 2448) SEAMLESS	P235GH/1.0305/A106	478,8 mm	8/672	
CWR-150-D16A-ROD.109	CWR	BE	D16A	150	MM	4,50 mm	DIN EN 10216-1 (DIN 2448) SEAMLESS	P235GH/1.0305/A106	278,4 mm	5/040	
CWR-150-D16A-ROD.109	CWR	BE	D16A	150	MM	4,50 mm	DIN EN 10216-1 (DIN 2448) SEAMLESS	P235GH/1.0305/A106	360 mm	6/509	
CWR-200-D16A-ROD.10	CWR	PE	D16A	25	MM	3,25 mm	DIN EN 10255 (DIN 2440) SEAMLESS	P235GH/1.0305/A106	211,2 mm	0/516	
CWR-200-D16A-ROD.10	CWR	BE	D16A	200	MM	4,50 mm	DIN EN 10217-1 (DIN 2458) WELDED	P235GH/1.0305/A106	122,4 mm	2/902	
CWR-200-D16A-ROD.10	CWR	BE	D16A	200	MM	4,50 mm	DIN EN 10217-1 (DIN 2458) WELDED	P235GH/1.0305/A106	240 mm	5/701	
CWR-200-D16A-ROD.10	CWR	BE	D16A	200	MM	4,50 mm	DIN EN 10217-1 (DIN 2458) WELDED	P235GH/1.0305/A106	32828,4 mm	781/328	
CWR-200-D16A-ROD.10	CWR	BE	D16A	200	MM	4,50 mm	DIN EN 10217-1 (DIN 2458) WELDED	P235GH/1.0305/A106	960 mm	22/837	
CWR-200-D16A-ROD.10	CWR	BE	D16A	200	MM	4,50 mm	DIN EN 10217-1 (DIN 2458) WELDED	P235GH/1.0305/A106	240 mm	5/701	
CWR-200-D16A-ROD.10	CWR	BE	D16A	200	MM	4,50 mm	DIN EN 10217-1 (DIN 2458) WELDED	P235GH/1.0305/A106	240 mm	5/701	
CWR-200-D16A-ROD.10	CWR	BE	D16A	200	MM	4,50 mm	DIN EN 10217-1 (DIN 2458) WELDED	P235GH/1.0305/A106	1231,2 mm	29/304	
CWR-200-D16A-ROD.10	CWR	BE	D16A	200	MM	4,50 mm	DIN EN 10217-1 (DIN 2458) WELDED	P235GH/1.0305/A106	960 mm	22/837	
CWR-200-D16A-ROD.10	CWR	BE	D16A	200	MM	4,50 mm	DIN EN 10217-1 (DIN 2458) WELDED	P235GH/1.0305/A106	1668 mm	39/698	
CWR-200-D16A-ROD.10	CWR	BE	D16A	200	MM	4,50 mm	DIN EN 10217-1 (DIN 2458) WELDED	P235GH/1.0305/A106	25873,2 mm	615/769	
CWR-200-D16A-ROD.10	CWR	BE	D16A	200	MM	4,50 mm	DIN EN 10217-1 (DIN 2458) WELDED	P235GH/1.0305/A106	240 mm	5/701	
CWR-200-D16A-ROD.10	CWR	BE	D16A	200	MM	4,50 mm	DIN EN 10217-1 (DIN 2458) WELDED	P235GH/1.0305/A106	29536,8 mm	702/973	
CWR-200-D16A-ROD.10	CWR	PE	D16A	15	MM	2,65 mm	DIN EN 10255 (DIN 2440) SEAMLESS	P235GH/1.0305/A106	120 mm	0/146	
CWR-200-D16A-ROD.10	CWR	BE	D16A	200	MM	4,50 mm	DIN EN 10217-1 (DIN 2458) WELDED	P235GH/1.0305/A106	622,8 mm	14/823	
CWR-200-D16A-ROD.10	CWR	BE	D16A	200	MM	4,50 mm	DIN EN 10217-1 (DIN 2458) WELDED	P235GH/1.0305/A106	801,6 mm	19/090	
CWR-200-D16A-ROD.10	CWR	BE	D16A	200	MM	4,50 mm	DIN EN 10217-1 (DIN 2458) WELDED	P235GH/1.0305/A106	1014 mm	24/133	
CWR-200-D16A-ROD.10	CWR	PE	D16A	25	MM	3,25 mm	DIN EN 10255 (DIN 2440) SEAMLESS	P235GH/1.0305/A106	211,2 mm	0/515	
CWR-200-D16A-ROD.10	CWR	BE	D16A	200	MM	4,50 mm	DIN EN 10217-1 (DIN 2458) WELDED	P235GH/1.0305/A106	6470,4 mm	153/994	
CWR-20-D16A-ROD.102	CWR	PE	D16A	20	MM	2,65 mm	DIN EN 10255 (DIN 2440) SEAMLESS	P235GH/1.0305/A106	6603,6 mm	10/434	
CWR-20-D16A-ROD.102	CWR	PE	D16A	20	MM	2,65 mm	DIN EN 10255 (DIN 2440) SEAMLESS	P235GH/1.0305/A106	386,4 mm	0/611	
CWR-20-D16A-ROD.102	CWR	PE	D16A	20	MM	2,65 mm	DIN EN 10255 (DIN 2440) SEAMLESS	P235GH/1.0305/A106	799,2 mm	1/263	
CWR-20-D16A-ROD.102	CWR	PE	D16A	20	MM	2,65 mm	DIN EN 10255 (DIN 2440) SEAMLESS	P235GH/1.0305/A106	1656 mm	2/617	
CWR-20-D16A-ROD.102	CWR	PE	D16A	20	MM	2,65 mm	DIN EN 10255 (DIN 2440) SEAMLESS	P235GH/1.0305/A106	265,2 mm	0/419	
CWR-20-D16A-ROD.102	CWR	PE	D16A	20	MM	2,65 mm	DIN EN 10255 (DIN 2440) SEAMLESS	P235GH/1.0305/A106	621,6 mm	0/983	
CWR-20-D16A-ROD.103	CWR	PE	D16A	20	MM	2,65 mm	DIN EN 10255 (DIN 2440) SEAMLESS	P235GH/1.0305/A106	799,2 mm	1/263	
CWR-20-D16A-ROD.103	CWR	PE	D16A	20	MM	2,65 mm	DIN EN 10255 (DIN 2440) SEAMLESS	P235GH/1.0305/A106	619,2 mm	0/979	
CWR-20-D16A-ROD.103	CWR	PE	D16A	20	MM	2,65 mm	DIN EN 10255 (DIN 2440) SEAMLESS	P235GH/1.0305/A106	6603,6 mm	10/434	
CWR-20-D16A-ROD.103	CWR	PE	D16A	20	MM	2,65 mm	DIN EN 10255 (DIN 2440) SEAMLESS	P235GH/1.0305/A106	386,4 mm	0/611	
CWR-20-D16A-ROD.103	CWR	PE	D16A	20	MM	2,65 mm	DIN EN 10255 (DIN 2440) SEAMLESS	P235GH/1.0305/A106	1656 mm	2/617	
CWR-20-D16A-ROD.103	CWR	PE	D16A	20	MM	2,65 mm	DIN EN 10255 (DIN 2440) SEAMLESS	P235GH/1.0305/A106	265,2 mm	0/419	
CWR-20-D16A-ROD.106	CWR	PE	D16A	20	MM	2,65 mm	DIN EN 10255 (DIN 2440) SEAMLESS	P235GH/1.0305/A106	2974,8 mm	4/700	
CWR-20-D16A-ROD.106	CWR	PE	D16A	20	MM	2,65 mm	DIN EN 10255 (DIN 2440) SEAMLESS	P235GH/1.0305/A106	1969,2 mm	3/111	
CWR-20-D16A-ROD.106	CWR	PE	D16A	20	MM	2,65 mm	DIN EN 10255 (DIN 2440) SEAMLESS	P235GH/1.0305/A106	260,4 mm	0/411	
CWR-20-D16A-ROD.106	CWR	PE	D16A	20	MM	2,65 mm	DIN EN 10255 (DIN 2440) SEAMLESS	P235GH/1.0305/A106	1993,2 mm	3/149	
CWR-20-D16A-ROD.106	CWR	PE	D16A	20	MM	2,65 mm	DIN EN 10255 (DIN 2440) SEAMLESS	P235GH/1.0305/A106	120 mm	0/190	
CWR-20-D16A-ROD.107	CWR	PE	D16A	20	MM	2,65 mm	DIN EN 10255 (DIN 2440) SEAMLESS	P235GH/1.0305/A106	1063,2 mm	1/681	
CWR-20-D16A-ROD.107	CWR	PE	D16A	20	MM	2,65 mm	DIN EN 10255 (DIN 2440) SEAMLESS	P235GH/1.0305/A106	1050 mm	1/658	
CWR-20-D16A-ROD.107	CWR	PE	D16A	20	MM	2,65 mm	DIN EN 10255 (DIN 2440) SEAMLESS	P235GH/1.0305/A106	2125,2 mm	3/358	
CWR-20-D16A-ROD.107	CWR	PE	D16A	20	MM	2,65 mm	DIN EN 10255 (DIN 2440) SEAMLESS	P235GH/1.0305/A106	260,4 mm	0/411	
CWR-20-D16A-ROD.107	CWR	PE	D16A	20	MM	2,65 mm	DIN EN 10255 (DIN 2440) SEAMLESS	P235GH/1.0305/A106	3130,8 mm	4/946	

PIPE TAG	TYPE OF FLUID	CONNECTION	SPECI.	DN	UNITS	THICKNESS(mm)	NORMATIVE	MATERIAL	LENGHT	WEIGHT (Kg)	PRICE
CWR-20-D16A-ROD.114	CWR	PE	D16A	20	MM	2,65 mm	DIN EN 10255 (DIN 2440) SEAMLESS	P235GH/1.0305/A106	1114,8 mm	1/762	
CWR-20-D16A-ROD.114	CWR	PE	D16A	20	MM	2,65 mm	DIN EN 10255 (DIN 2440) SEAMLESS	P235GH/1.0305/A106	240 mm	0/379	
CWR-20-D16A-ROD.114	CWR	PE	D16A	20	MM	2,65 mm	DIN EN 10255 (DIN 2440) SEAMLESS	P235GH/1.0305/A106	70,8 mm	0/111	
CWR-20-D16A-ROD.114	CWR	PE	D16A	20	MM	2,65 mm	DIN EN 10255 (DIN 2440) SEAMLESS	P235GH/1.0305/A106	1760,4 mm	2/781	
CWR-20-D16A-ROD.114	CWR	PE	D16A	20	MM	2,65 mm	DIN EN 10255 (DIN 2440) SEAMLESS	P235GH/1.0305/A106	67,2 mm	0/107	
CWR-20-D16A-ROD.118	CWR	PE	D16A	20	MM	2,65 mm	DIN EN 10255 (DIN 2440) SEAMLESS	P235GH/1.0305/A106	616,8 mm	0/975	
CWR-20-D16A-ROD.118	CWR	PE	D16A	20	MM	2,65 mm	DIN EN 10255 (DIN 2440) SEAMLESS	P235GH/1.0305/A106	270 mm	0/427	
CWR-20-D16A-ROD.119	CWR	PE	D16A	20	MM	2,65 mm	DIN EN 10255 (DIN 2440) SEAMLESS	P235GH/1.0305/A106	616,8 mm	0/975	
CWR-20-D16A-ROD.119	CWR	PE	D16A	20	MM	2,65 mm	DIN EN 10255 (DIN 2440) SEAMLESS	P235GH/1.0305/A106	270 mm	0/427	
CWR-25-D16A-ROD.108	CWR	PE	D16A	25	MM	3,25 mm	DIN EN 10255 (DIN 2440) SEAMLESS	P235GH/1.0305/A106	120 mm	0/293	
CWR-25-D16A-ROD.108	CWR	PE	D16A	25	MM	3,25 mm	DIN EN 10255 (DIN 2440) SEAMLESS	P235GH/1.0305/A106	1137,6 mm	2/775	
CWR-25-D16A-ROD.108	CWR	PE	D16A	25	MM	3,25 mm	DIN EN 10255 (DIN 2440) SEAMLESS	P235GH/1.0305/A106	265,2 mm	0/648	
CWR-25-D16A-ROD.108	CWR	PE	D16A	25	MM	3,25 mm	DIN EN 10255 (DIN 2440) SEAMLESS	P235GH/1.0305/A106	223,2 mm	0/543	
CWR-25-D16A-ROD.108	CWR	PE	D16A	25	MM	3,25 mm	DIN EN 10255 (DIN 2440) SEAMLESS	P235GH/1.0305/A106	841,2 mm	2/053	
CWR-25-D16A-ROD.108	CWR	PE	D16A	25	MM	3,25 mm	DIN EN 10255 (DIN 2440) SEAMLESS	P235GH/1.0305/A106	249,6 mm	0/608	
CWR-25-D16A-ROD.108	CWR	PE	D16A	25	MM	3,25 mm	DIN EN 10255 (DIN 2440) SEAMLESS	P235GH/1.0305/A106	4191,6 mm	10/228	
CWR-25-D16A-ROD.108	CWR	BE	D16A	100	MM	3,60 mm	DIN EN 10216-1 (DIN 2448) SEAMLESS	P235GH/1.0305/A106	120 mm	1/189	
CWR-25-D16A-ROD.108	CWR	PE	D16A	50	MM	3,65 mm	DIN EN 10255 (DIN 2440) SEAMLESS	P235GH/1.0305/A106	120 mm	0/612	
CWR-25-D16A-ROD.108	CWR	PE	D16A	25	MM	3,25 mm	DIN EN 10255 (DIN 2440) SEAMLESS	P235GH/1.0305/A106	120 mm	0/293	
CWR-25-D16A-ROD.108	CWR	PE	D16A	25	MM	3,25 mm	DIN EN 10255 (DIN 2440) SEAMLESS	P235GH/1.0305/A106	207,6 mm	0/507	
CWR-25-D16A-ROD.108	CWR	PE	D16A	15	MM	2,65 mm	DIN EN 10255 (DIN 2440) SEAMLESS	P235GH/1.0305/A106	120 mm	0/146	
CWR-25-D16A-ROD.108	CWR	PE	D16A	25	MM	3,25 mm	DIN EN 10255 (DIN 2440) SEAMLESS	P235GH/1.0305/A106	120 mm	0/291	
CWR-25-D16A-ROD.108	CWR	PE	D16A	50	MM	3,65 mm	DIN EN 10255 (DIN 2440) SEAMLESS	P235GH/1.0305/A106	169,2 mm	0/865	
CWR-25-D16A-ROD.108	CWR	PE	D16A	25	MM	3,25 mm	DIN EN 10255 (DIN 2440) SEAMLESS	P235GH/1.0305/A106	120 mm	0/291	
CWR-25-D16A-ROD.108	CWR	PE	D16A	25	MM	3,25 mm	DIN EN 10255 (DIN 2440) SEAMLESS	P235GH/1.0305/A106	930 mm	2/268	
CWR-25-D16A-ROD.112	CWR	PE	D16A	25	MM	3,25 mm	DIN EN 10255 (DIN 2440) SEAMLESS	P235GH/1.0305/A106	93,6 mm	0/229	
CWR-25-D16A-ROD.112	CWR	PE	D16A	50	MM	3,65 mm	DIN EN 10255 (DIN 2440) SEAMLESS	P235GH/1.0305/A106	120 mm	0/612	
CWR-25-D16A-ROD.112	CWR	BE	D16A	100	MM	3,60 mm	DIN EN 10216-1 (DIN 2448) SEAMLESS	P235GH/1.0305/A106	240 mm	2/377	
CWR-25-D16A-ROD.112	CWR	PE	D16A	25	MM	3,25 mm	DIN EN 10255 (DIN 2440) SEAMLESS	P235GH/1.0305/A106	180 mm	0/439	
CWR-25-D16A-ROD.112	CWR	PE	D16A	50	MM	3,65 mm	DIN EN 10255 (DIN 2440) SEAMLESS	P235GH/1.0305/A106	120 mm	0/612	
CWR-25-D16A-ROD.112	CWR	PE	D16A	25	MM	3,25 mm	DIN EN 10255 (DIN 2440) SEAMLESS	P235GH/1.0305/A106	93,6 mm	0/229	
CWR-25-D16A-ROD.112	CWR	PE	D16A	15	MM	2,65 mm	DIN EN 10255 (DIN 2440) SEAMLESS	P235GH/1.0305/A106	120 mm	0/146	
CWR-25-D16A-ROD.112	CWR	PE	D16A	25	MM	3,25 mm	DIN EN 10255 (DIN 2440) SEAMLESS	P235GH/1.0305/A106	105,6 mm	0/258	
CWR-25-D16A-ROD.112	CWR	PE	D16A	25	MM	3,25 mm	DIN EN 10255 (DIN 2440) SEAMLESS	P235GH/1.0305/A106	296,4 mm	0/723	
CWR-25-D16A-ROD.112	CWR	PE	D16A	25	MM	3,25 mm	DIN EN 10255 (DIN 2440) SEAMLESS	P235GH/1.0305/A106	120 mm	0/293	
CWR-25-D16A-ROD.112	CWR	PE	D16A	25	MM	3,25 mm	DIN EN 10255 (DIN 2440) SEAMLESS	P235GH/1.0305/A106	120 mm	0/293	
CWR-25-D16A-ROD.113	CWR	PE	D16A	25	MM	3,25 mm	DIN EN 10255 (DIN 2440) SEAMLESS	P235GH/1.0305/A106	240 mm	0/586	
CWR-25-D16A-ROD.113	CWR	PE	D16A	25	MM	3,25 mm	DIN EN 10255 (DIN 2440) SEAMLESS	P235GH/1.0305/A106	351,6 mm	0/859	
CWR-25-D16A-ROD.113	CWR	PE	D16A	25	MM	3,25 mm	DIN EN 10255 (DIN 2440) SEAMLESS	P235GH/1.0305/A106	358,8 mm	0/876	
CWR-25-D16A-ROD.117	CWR	PE	D16A	25	MM	3,25 mm	DIN EN 10255 (DIN 2440) SEAMLESS	P235GH/1.0305/A106	300 mm	0/732	
CWR-25-D16A-ROD.117	CWR	PE	D16A	50	MM	3,65 mm	DIN EN 10255 (DIN 2440) SEAMLESS	P235GH/1.0305/A106	120 mm	0/612	
CWR-25-D16A-ROD.117	CWR	PE	D16A	25	MM	3,25 mm	DIN EN 10255 (DIN 2440) SEAMLESS	P235GH/1.0305/A106	662,4 mm	1/616	
CWR-25-D16A-ROD.117	CWR	PE	D16A	50	MM	3,65 mm	DIN EN 10255 (DIN 2440) SEAMLESS	P235GH/1.0305/A106	120 mm	0/612	
CWR-25-D16A-ROD.117	CWR	PE	D16A	25	MM	3,25 mm	DIN EN 10255 (DIN 2440) SEAMLESS	P235GH/1.0305/A106	120 mm	0/293	
CWR-25-D16A-ROD.117	CWR	BE	D16A	100	MM	3,60 mm	DIN EN 10216-1 (DIN 2448) SEAMLESS	P235GH/1.0305/A106	240 mm	2/377	
CWR-25-D16A-ROD.117	CWR	PE	D16A	25	MM	3,25 mm	DIN EN 10255 (DIN 2440) SEAMLESS	P235GH/1.0305/A106	1485,6 mm	3/623	
CWR-25-D16A-ROD.117	CWR	PE	D16A	15	MM	2,65 mm	DIN EN 10255 (DIN 2440) SEAMLESS	P235GH/1.0305/A106	120 mm	0/146	
CWR-25-D16A-ROD.117	CWR	PE	D16A	25	MM	3,25 mm	DIN EN 10255 (DIN 2440) SEAMLESS	P235GH/1.0305/A106	516 mm	1/259	

PIPE TAG	TYPE OF FLUID	CONNECTION	SPECI.	DN	UNITS	THICKNESS(mm)	NORMATIVE	MATERIAL	LENGHT	WEIGHT (Kg)	PRICE
CWR-25-D16A-ROD.117	CWR	PE	D16A	25	MM	3,25 mm	DIN EN 10255 (DIN 2440) SEAMLESS	P235GH/1.0305/A106	1442,4 mm	3/520	
CWR-25-D16A-ROD.117	CWR	PE	D16A	25	MM	3,25 mm	DIN EN 10255 (DIN 2440) SEAMLESS	P235GH/1.0305/A106	120 mm	0/293	
CWR-25-D16A-ROD.117	CWR	PE	D16A	25	MM	3,25 mm	DIN EN 10255 (DIN 2440) SEAMLESS	P235GH/1.0305/A106	120 mm	0/294	
CWR-32-D16A-ROD.104	CWR	PE	D16A	32	MM	3,25 mm	DIN EN 10255 (DIN 2440) SEAMLESS	P235GH/1.0305/A106	255,6 mm	0/804	
CWR-32-D16A-ROD.104	CWR	BE	D16A	100	MM	3,60 mm	DIN EN 10216-1 (DIN 2448) SEAMLESS	P235GH/1.0305/A106	240 mm	2/376	
CWR-32-D16A-ROD.104	CWR	PE	D16A	15	MM	2,65 mm	DIN EN 10255 (DIN 2440) SEAMLESS	P235GH/1.0305/A106	120 mm	0/146	
CWR-32-D16A-ROD.104	CWR	PE	D16A	32	MM	3,25 mm	DIN EN 10255 (DIN 2440) SEAMLESS	P235GH/1.0305/A106	1376,4 mm	4/323	
CWR-32-D16A-ROD.104	CWR	PE	D16A	32	MM	3,25 mm	DIN EN 10255 (DIN 2440) SEAMLESS	P235GH/1.0305/A106	120 mm	0/377	
CWR-32-D16A-ROD.104	CWR	PE	D16A	15	MM	2,65 mm	DIN EN 10255 (DIN 2440) SEAMLESS	P235GH/1.0305/A106	180 mm	0/220	
CWR-32-D16A-ROD.115	CWR	PE	D16A	32	MM	3,25 mm	DIN EN 10255 (DIN 2440) SEAMLESS	P235GH/1.0305/A106	795,6 mm	2/497	
CWR-32-D16A-ROD.115	CWR	PE	D16A	32	MM	3,25 mm	DIN EN 10255 (DIN 2440) SEAMLESS	P235GH/1.0305/A106	4020 mm	12/622	
CWR-32-D16A-ROD.115	CWR	PE	D16A	32	MM	3,25 mm	DIN EN 10255 (DIN 2440) SEAMLESS	P235GH/1.0305/A106	969,6 mm	3/044	
CWR-32-D16A-ROD.121	CWR	PE	D16A	32	MM	3,25 mm	DIN EN 10255 (DIN 2440) SEAMLESS	P235GH/1.0305/A106	306 mm	0/962	
CWR-32-D16A-ROD.121	CWR	PE	D16A	32	MM	3,25 mm	DIN EN 10255 (DIN 2440) SEAMLESS	P235GH/1.0305/A106	171,6 mm	0/540	
CWR-32-D16A-ROD.121	CWR	BE	D16A	100	MM	3,60 mm	DIN EN 10216-1 (DIN 2448) SEAMLESS	P235GH/1.0305/A106	240 mm	2/376	
CWR-32-D16A-ROD.121	CWR	PE	D16A	32	MM	3,25 mm	DIN EN 10255 (DIN 2440) SEAMLESS	P235GH/1.0305/A106	148,8 mm	0/467	
CWR-32-D16A-ROD.121	CWR	PE	D16A	15	MM	2,65 mm	DIN EN 10255 (DIN 2440) SEAMLESS	P235GH/1.0305/A106	120 mm	0/146	
CWR-32-D16A-ROD.121	CWR	PE	D16A	32	MM	3,25 mm	DIN EN 10255 (DIN 2440) SEAMLESS	P235GH/1.0305/A106	268,8 mm	0/846	
CWR-65-D16A-ROD.122	CWR	BE	D16A	100	MM	3,60 mm	DIN EN 10216-1 (DIN 2448) SEAMLESS	P235GH/1.0305/A106	240 mm	2/376	
CWR-65-D16A-ROD.122	CWR	BE	D16A	65	MM	2,90 mm	DIN EN 10216-1 (DIN 2448) SEAMLESS	P235GH/1.0305/A106	240 mm	1/264	
CWR-65-D16A-ROD.122	CWR	PE	D16A	25	MM	3,25 mm	DIN EN 10255 (DIN 2440) SEAMLESS	P235GH/1.0305/A106	240 mm	0/585	
CWR-65-D16A-ROD.122	CWR	BE	D16A	65	MM	2,90 mm	DIN EN 10216-1 (DIN 2448) SEAMLESS	P235GH/1.0305/A106	240 mm	1/267	
CWR-65-D16A-ROD.122	CWR	BE	D16A	65	MM	2,90 mm	DIN EN 10216-1 (DIN 2448) SEAMLESS	P235GH/1.0305/A106	120 mm	0/634	
CWR-65-D16A-ROD.122	CWR	PE	D16A	25	MM	3,25 mm	DIN EN 10255 (DIN 2440) SEAMLESS	P235GH/1.0305/A106	240 mm	0/586	
CWR-65-D16A-ROD.122	CWR	PE	D16A	15	MM	2,65 mm	DIN EN 10255 (DIN 2440) SEAMLESS	P235GH/1.0305/A106	120 mm	0/146	
CWR-40-D16A-ROD.123	CWR	BE	D16A	100	MM	3,60 mm	DIN EN 10216-1 (DIN 2448) SEAMLESS	P235GH/1.0305/A106	240 mm	2/376	
CWR-40-D16A-ROD.123	CWR	PE	D16A	40	MM	3,25 mm	DIN EN 10255 (DIN 2440) SEAMLESS	P235GH/1.0305/A106	244,8 mm	0/883	
CWR-40-D16A-ROD.123	CWR	PE	D16A	40	MM	3,25 mm	DIN EN 10255 (DIN 2440) SEAMLESS	P235GH/1.0305/A106	5301,6 mm	19/138	
CWR-40-D16A-ROD.123	CWR	PE	D16A	25	MM	3,25 mm	DIN EN 10255 (DIN 2440) SEAMLESS	P235GH/1.0305/A106	240 mm	0/586	
CWR-40-D16A-ROD.123	CWR	PE	D16A	40	MM	3,25 mm	DIN EN 10255 (DIN 2440) SEAMLESS	P235GH/1.0305/A106	3153,6 mm	11/382	
CWR-40-D16A-ROD.123	CWR	PE	D16A	40	MM	3,25 mm	DIN EN 10255 (DIN 2440) SEAMLESS	P235GH/1.0305/A106	120 mm	0/435	
CWR-40-D16A-ROD.123	CWR	PE	D16A	40	MM	3,25 mm	DIN EN 10255 (DIN 2440) SEAMLESS	P235GH/1.0305/A106	120 mm	0/435	
CWR-40-D16A-ROD.123	CWR	PE	D16A	15	MM	2,65 mm	DIN EN 10255 (DIN 2440) SEAMLESS	P235GH/1.0305/A106	120 mm	0/146	
CWR-40-D16A-ROD.123	CWR	PE	D16A	40	MM	3,25 mm	DIN EN 10255 (DIN 2440) SEAMLESS	P235GH/1.0305/A106	120 mm	0/434	
CWR-40-D16A-ROD.123	CWR	PE	D16A	40	MM	3,25 mm	DIN EN 10255 (DIN 2440) SEAMLESS	P235GH/1.0305/A106	784,8 mm	2/835	
CWR-40-D16A-ROD.123	CWR	PE	D16A	25	MM	3,25 mm	DIN EN 10255 (DIN 2440) SEAMLESS	P235GH/1.0305/A106	240 mm	0/586	
CWR-40-D16A-ROD.123	CWR	PE	D16A	40	MM	3,25 mm	DIN EN 10255 (DIN 2440) SEAMLESS	P235GH/1.0305/A106	3010,8 mm	10/870	
CWR-40-D16A-ROD.123	CWR	PE	D16A	40	MM	3,25 mm	DIN EN 10255 (DIN 2440) SEAMLESS	P235GH/1.0305/A106	36156 mm	130/524	
CWR-50-D16A-ROD.116	CWR	PE	D16A	50	MM	3,65 mm	DIN EN 10255 (DIN 2440) SEAMLESS	P235GH/1.0305/A106	312 mm	1/591	
CWR-50-D16A-ROD.116	CWR	PE	D16A	50	MM	3,65 mm	DIN EN 10255 (DIN 2440) SEAMLESS	P235GH/1.0305/A106	3322,8 mm	16/947	
CWR-50-D16A-ROD.116	CWR	PE	D16A	50	MM	3,65 mm	DIN EN 10255 (DIN 2440) SEAMLESS	P235GH/1.0305/A106	2246,4 mm	11/456	
CWR-65-D16A-ROD.124	CWR	BE	D16A	65	MM	2,90 mm	DIN EN 10216-1 (DIN 2448) SEAMLESS	P235GH/1.0305/A106	298,8 mm	1/579	
CWR-65-D16A-ROD.124	CWR	BE	D16A	65	MM	2,90 mm	DIN EN 10216-1 (DIN 2448) SEAMLESS	P235GH/1.0305/A106	578,4 mm	3/054	
CWR-65-D16A-ROD.124	CWR	BE	D16A	65	MM	2,90 mm	DIN EN 10216-1 (DIN 2448) SEAMLESS	P235GH/1.0305/A106	23796 mm	125/642	
CWR-65-D16A-ROD.124	CWR	BE	D16A	65	MM	2,90 mm	DIN EN 10216-1 (DIN 2448) SEAMLESS	P235GH/1.0305/A106	2917,2 mm	15/404	
CWR-65-D16A-ROD.124	CWR	BE	D16A	65	MM	2,90 mm	DIN EN 10216-1 (DIN 2448) SEAMLESS	P235GH/1.0305/A106	588 mm	3/107	
CWR-65-D16A-ROD.124	CWR	BE	D16A	65	MM	2,90 mm	DIN EN 10216-1 (DIN 2448) SEAMLESS	P235GH/1.0305/A106	6230,4 mm	32/898	
CWR-65-D16A-ROD.124	CWR	BE	D16A	65	MM	2,90 mm	DIN EN 10216-1 (DIN 2448) SEAMLESS	P235GH/1.0305/A106	530,4 mm	2/801	

PIPE TAG	TYPE OF FLUID	CONNECTION	SPECI.	DN	UNITS	THICKNESS(mm)	NORMATIVE	MATERIAL	LENGHT	WEIGHT (Kg)	PRICE
CWR-65-D16A-ROD.124	CWR	BE	D16A	65	MM	2,90 mm	DIN EN 10216-1 (DIN 2448) SEAMLESS	P235GH/1.0305/A106	7509,6 mm	39/649	
CWR-65-D16A-ROD.124	CWR	BE	D16A	65	MM	2,90 mm	DIN EN 10216-1 (DIN 2448) SEAMLESS	P235GH/1.0305/A106	1353,6 mm	7/149	
CWR-65-D16A-ROD.124	CWR	BE	D16A	65	MM	2,90 mm	DIN EN 10216-1 (DIN 2448) SEAMLESS	P235GH/1.0305/A106	786 mm	4/147	
CWR-65-D16A-ROD.124	CWR	BE	D16A	65	MM	2,90 mm	DIN EN 10216-1 (DIN 2448) SEAMLESS	P235GH/1.0305/A106	75655,2 mm	399/461	
CWR-65-D16A-ROD.124	CWR	BE	D16A	65	MM	2,90 mm	DIN EN 10216-1 (DIN 2448) SEAMLESS	P235GH/1.0305/A106	6070,8 mm	32/054	
CWR-80-D16A-ROD.105	CWR	BE	D16A	80	MM	3,20 mm	DIN EN 10216-1 (DIN 2448) SEAMLESS	P235GH/1.0305/A106	93,6 mm	0/641	
CWR-80-D16A-ROD.105	CWR	BE	D16A	80	MM	3,20 mm	DIN EN 10216-1 (DIN 2448) SEAMLESS	P235GH/1.0305/A106	120 mm	0/817	
CWR-80-D16A-ROD.105	CWR	BE	D16A	80	MM	3,20 mm	DIN EN 10216-1 (DIN 2448) SEAMLESS	P235GH/1.0305/A106	222 mm	1/510	
CWR-80-D16A-ROD.105	CWR	PE	D16A	15	MM	2,65 mm	DIN EN 10255 (DIN 2440) SEAMLESS	P235GH/1.0305/A106	120 mm	0/146	
CWR-80-D16A-ROD.105	CWR	BE	D16A	80	MM	3,20 mm	DIN EN 10216-1 (DIN 2448) SEAMLESS	P235GH/1.0305/A106	555,6 mm	3/784	
CWR-80-D16A-ROD.105	CWR	BE	D16A	80	MM	3,20 mm	DIN EN 10216-1 (DIN 2448) SEAMLESS	P235GH/1.0305/A106	2424 mm	16/507	
CWR-80-D16A-ROD.105	CWR	BE	D16A	80	MM	3,20 mm	DIN EN 10216-1 (DIN 2448) SEAMLESS	P235GH/1.0305/A106	360 mm	2/452	
CWR-80-D16A-ROD.105	CWR	BE	D16A	80	MM	3,20 mm	DIN EN 10216-1 (DIN 2448) SEAMLESS	P235GH/1.0305/A106	180 mm	1/229	
CWR-80-D16A-ROD.105	CWR	BE	D16A	80	MM	3,20 mm	DIN EN 10216-1 (DIN 2448) SEAMLESS	P235GH/1.0305/A106	120 mm	0/820	
CWR-80-D16A-ROD.105	CWR	BE	D16A	80	MM	3,20 mm	DIN EN 10216-1 (DIN 2448) SEAMLESS	P235GH/1.0305/A106	153,6 mm	1/048	
CWR-80-D16A-ROD.105	CWR	BE	D16A	80	MM	3,20 mm	DIN EN 10216-1 (DIN 2448) SEAMLESS	P235GH/1.0305/A106	240 mm	1/635	
CWR-80-D16A-ROD.105	CWR	BE	D16A	80	MM	3,20 mm	DIN EN 10216-1 (DIN 2448) SEAMLESS	P235GH/1.0305/A106	240 mm	1/631	
CWR-80-D16A-ROD.105	CWR	BE	D16A	80	MM	3,20 mm	DIN EN 10216-1 (DIN 2448) SEAMLESS	P235GH/1.0305/A106	240 mm	1/634	
CWS-150-D16A-ROD.109	CWS	BE	D16A	150	MM	4,50 mm	DIN EN 10216-1 (DIN 2448) SEAMLESS	P235GH/1.0305/A106	1555,2 mm	28/153	
CWS-150-D16A-ROD.109	CWS	PE	D16A	15	MM	2,65 mm	DIN EN 10255 (DIN 2440) SEAMLESS	P235GH/1.0305/A106	120 mm	0/146	
CWS-150-D16A-ROD.109	CWS	BE	D16A	150	MM	4,50 mm	DIN EN 10216-1 (DIN 2448) SEAMLESS	P235GH/1.0305/A106	1236 mm	22/371	
CWS-200-D16A-ROD.10	CWS	PE	D16A	15	MM	2,65 mm	DIN EN 10255 (DIN 2440) SEAMLESS	P235GH/1.0305/A106	120 mm	0/146	
CWS-200-D16A-ROD.10	CWS	BE	D16A	200	MM	4,50 mm	DIN EN 10217-1 (DIN 2458) WELDED	P235GH/1.0305/A106	786 mm	18/707	
CWS-200-D16A-ROD.10	CWS	BE	D16A	200	MM	4,50 mm	DIN EN 10217-1 (DIN 2458) WELDED	P235GH/1.0305/A106	1668 mm	39/698	
CWS-200-D16A-ROD.10	CWS	BE	D16A	200	MM	4,50 mm	DIN EN 10217-1 (DIN 2458) WELDED	P235GH/1.0305/A106	801,6 mm	19/090	
CWS-200-D16A-ROD.10	CWS	PE	D16A	15	MM	2,65 mm	DIN EN 10255 (DIN 2440) SEAMLESS	P235GH/1.0305/A106	120 mm	0/146	
CWS-200-D16A-ROD.10	CWS	BE	D16A	200	MM	4,50 mm	DIN EN 10217-1 (DIN 2458) WELDED	P235GH/1.0305/A106	26881,2 mm	639/765	
CWS-200-D16A-ROD.10	CWS	BE	D16A	200	MM	4,50 mm	DIN EN 10217-1 (DIN 2458) WELDED	P235GH/1.0305/A106	1363,2 mm	32/445	
CWS-200-D16A-ROD.10	CWS	BE	D16A	200	MM	4,50 mm	DIN EN 10217-1 (DIN 2458) WELDED	P235GH/1.0305/A106	122,4 mm	2/902	
CWS-200-D16A-ROD.10	CWS	BE	D16A	200	MM	4,50 mm	DIN EN 10217-1 (DIN 2458) WELDED	P235GH/1.0305/A106	28780,8 mm	684/992	
CWS-200-D16A-ROD.10	CWS	BE	D16A	200	MM	4,50 mm	DIN EN 10217-1 (DIN 2458) WELDED	P235GH/1.0305/A106	5990,4 mm	142/563	
CWS-200-D16A-ROD.10	CWS	BE	D16A	200	MM	4,50 mm	DIN EN 10217-1 (DIN 2458) WELDED	P235GH/1.0305/A106	33309,6 mm	792/760	
CWS-200-D16A-ROD.10	CWS	BE	D16A	200	MM	4,50 mm	DIN EN 10217-1 (DIN 2458) WELDED	P235GH/1.0305/A106	240 mm	5/701	
CWS-200-D16A-ROD.10	CWS	BE	D16A	200	MM	4,50 mm	DIN EN 10217-1 (DIN 2458) WELDED	P235GH/1.0305/A106	240 mm	5/701	
CWS-200-D16A-ROD.10	CWS	BE	D16A	200	MM	4,50 mm	DIN EN 10217-1 (DIN 2458) WELDED	P235GH/1.0305/A106	240 mm	5/701	
CWS-200-D16A-ROD.10	CWS	BE	D16A	200	MM	4,50 mm	DIN EN 10217-1 (DIN 2458) WELDED	P235GH/1.0305/A106	960 mm	22/837	
CWS-200-D16A-ROD.10	CWS	BE	D16A	200	MM	4,50 mm	DIN EN 10217-1 (DIN 2458) WELDED	P235GH/1.0305/A106	240 mm	5/701	
CWS-200-D16A-ROD.10	CWS	BE	D16A	200	MM	4,50 mm	DIN EN 10217-1 (DIN 2458) WELDED	P235GH/1.0305/A106	960 mm	22/837	
CWS-20-D16A-ROD.102	CWS	PE	D16A	20	MM	2,65 mm	DIN EN 10255 (DIN 2440) SEAMLESS	P235GH/1.0305/A106	120 mm	0/190	
CWS-20-D16A-ROD.102	CWS	PE	D16A	20	MM	2,65 mm	DIN EN 10255 (DIN 2440) SEAMLESS	P235GH/1.0305/A106	240 mm	0/379	
CWS-20-D16A-ROD.103	CWS	PE	D16A	20	MM	2,65 mm	DIN EN 10255 (DIN 2440) SEAMLESS	P235GH/1.0305/A106	240 mm	0/379	
CWS-20-D16A-ROD.103	CWS	PE	D16A	20	MM	2,65 mm	DIN EN 10255 (DIN 2440) SEAMLESS	P235GH/1.0305/A106	120 mm	0/190	
CWS-20-D16A-ROD.106	CWS	PE	D16A	20	MM	2,65 mm	DIN EN 10255 (DIN 2440) SEAMLESS	P235GH/1.0305/A106	120 mm	0/190	
CWS-20-D16A-ROD.106	CWS	PE	D16A	20	MM	2,65 mm	DIN EN 10255 (DIN 2440) SEAMLESS	P235GH/1.0305/A106	120 mm	0/189	
CWS-20-D16A-ROD.106	CWS	PE	D16A	20	MM	2,65 mm	DIN EN 10255 (DIN 2440) SEAMLESS	P235GH/1.0305/A106	112,8 mm	0/179	
CWS-20-D16A-ROD.106	CWS	PE	D16A	20	MM	2,65 mm	DIN EN 10255 (DIN 2440) SEAMLESS	P235GH/1.0305/A106	3912 mm	6/180	
CWS-20-D16A-ROD.106	CWS	PE	D16A	20	MM	2,65 mm	DIN EN 10255 (DIN 2440) SEAMLESS	P235GH/1.0305/A106	849,6 mm	1/342	
CWS-20-D16A-ROD.106	CWS	PE	D16A	20	MM	2,65 mm	DIN EN 10255 (DIN 2440) SEAMLESS	P235GH/1.0305/A106	1082,4 mm	1/709	

PIPE TAG	TYPE OF FLUID	CONNECTION	SPECI.	DN	UNITS	THICKNESS(mm)	NORMATIVE	MATERIAL	LENGHT	WEIGHT (Kg)	PRICE
CWS-20-D16A-ROD.106	CWS	PE	D16A	20	MM	2,65 mm	DIN EN 10255 (DIN 2440) SEAMLESS	P235GH/1.0305/A106	256,8 mm	0/405	
CWS-20-D16A-ROD.106	CWS	PE	D16A	20	MM	2,65 mm	DIN EN 10255 (DIN 2440) SEAMLESS	P235GH/1.0305/A106	1626 mm	2/570	
CWS-20-D16A-ROD.107	CWS	PE	D16A	20	MM	2,65 mm	DIN EN 10255 (DIN 2440) SEAMLESS	P235GH/1.0305/A106	240 mm	0/379	
CWS-20-D16A-ROD.107	CWS	PE	D16A	20	MM	2,65 mm	DIN EN 10255 (DIN 2440) SEAMLESS	P235GH/1.0305/A106	120 mm	0/190	
CWS-20-D16A-ROD.114	CWS	PE	D16A	20	MM	2,65 mm	DIN EN 10255 (DIN 2440) SEAMLESS	P235GH/1.0305/A106	120 mm	0/190	
CWS-20-D16A-ROD.114	CWS	PE	D16A	20	MM	2,65 mm	DIN EN 10255 (DIN 2440) SEAMLESS	P235GH/1.0305/A106	271,2 mm	0/428	
CWS-20-D16A-ROD.114	CWS	PE	D16A	20	MM	2,65 mm	DIN EN 10255 (DIN 2440) SEAMLESS	P235GH/1.0305/A106	104,4 mm	0/165	
CWS-20-D16A-ROD.118	CWS	PE	D16A	20	MM	2,65 mm	DIN EN 10255 (DIN 2440) SEAMLESS	P235GH/1.0305/A106	616,8 mm	0/975	
CWS-20-D16A-ROD.118	CWS	PE	D16A	20	MM	2,65 mm	DIN EN 10255 (DIN 2440) SEAMLESS	P235GH/1.0305/A106	270 mm	0/427	
CWS-20-D16A-ROD.119	CWS	PE	D16A	20	MM	2,65 mm	DIN EN 10255 (DIN 2440) SEAMLESS	P235GH/1.0305/A106	616,8 mm	0/975	
CWS-20-D16A-ROD.119	CWS	PE	D16A	20	MM	2,65 mm	DIN EN 10255 (DIN 2440) SEAMLESS	P235GH/1.0305/A106	270 mm	0/427	
CWS-25-D16A-ROD.108	CWS	PE	D16A	25	MM	3,25 mm	DIN EN 10255 (DIN 2440) SEAMLESS	P235GH/1.0305/A106	60 mm	0/146	
CWS-25-D16A-ROD.108	CWS	PE	D16A	25	MM	3,25 mm	DIN EN 10255 (DIN 2440) SEAMLESS	P235GH/1.0305/A106	230,4 mm	0/563	
CWS-25-D16A-ROD.108	CWS	PE	D16A	25	MM	3,25 mm	DIN EN 10255 (DIN 2440) SEAMLESS	P235GH/1.0305/A106	249,6 mm	0/608	
CWS-25-D16A-ROD.108	CWS	PE	D16A	25	MM	3,25 mm	DIN EN 10255 (DIN 2440) SEAMLESS	P235GH/1.0305/A106	2277,6 mm	5/556	
CWS-25-D16A-ROD.108	CWS	PE	D16A	25	MM	3,25 mm	DIN EN 10255 (DIN 2440) SEAMLESS	P235GH/1.0305/A106	60 mm	0/146	
CWS-25-D16A-ROD.108	CWS	PE	D16A	25	MM	3,25 mm	DIN EN 10255 (DIN 2440) SEAMLESS	P235GH/1.0305/A106	172,8 mm	0/421	
CWS-25-D16A-ROD.108	CWS	PE	D16A	25	MM	3,25 mm	DIN EN 10255 (DIN 2440) SEAMLESS	P235GH/1.0305/A106	1048,8 mm	2/558	
CWS-25-D16A-ROD.108	CWS	PE	D16A	25	MM	3,25 mm	DIN EN 10255 (DIN 2440) SEAMLESS	P235GH/1.0305/A106	4263,6 mm	10/404	
CWS-25-D16A-ROD.108	CWS	PE	D16A	15	MM	2,65 mm	DIN EN 10255 (DIN 2440) SEAMLESS	P235GH/1.0305/A106	120 mm	0/146	
CWS-25-D16A-ROD.108	CWS	PE	D16A	25	MM	3,25 mm	DIN EN 10255 (DIN 2440) SEAMLESS	P235GH/1.0305/A106	120 mm	0/294	
CWS-25-D16A-ROD.108	CWS	PE	D16A	25	MM	3,25 mm	DIN EN 10255 (DIN 2440) SEAMLESS	P235GH/1.0305/A106	530,4 mm	1/294	
CWS-25-D16A-ROD.108	CWS	PE	D16A	25	MM	3,25 mm	DIN EN 10255 (DIN 2440) SEAMLESS	P235GH/1.0305/A106	1760,4 mm	4/295	
CWS-25-D16A-ROD.108	CWS	PE	D16A	25	MM	3,25 mm	DIN EN 10255 (DIN 2440) SEAMLESS	P235GH/1.0305/A106	151,2 mm	0/369	
CWS-25-D16A-ROD.108	CWS	PE	D16A	25	MM	3,25 mm	DIN EN 10255 (DIN 2440) SEAMLESS	P235GH/1.0305/A106	841,2 mm	2/054	
CWS-25-D16A-ROD.108	CWS	PE	D16A	25	MM	3,25 mm	DIN EN 10255 (DIN 2440) SEAMLESS	P235GH/1.0305/A106	5917,2 mm	14/437	
CWS-25-D16A-ROD.112	CWS	PE	D16A	15	MM	2,65 mm	DIN EN 10255 (DIN 2440) SEAMLESS	P235GH/1.0305/A106	12 mm	0/015	
CWS-25-D16A-ROD.112	CWS	PE	D16A	15	MM	2,65 mm	DIN EN 10255 (DIN 2440) SEAMLESS	P235GH/1.0305/A106	120 mm	0/146	
CWS-25-D16A-ROD.112	CWS	PE	D16A	25	MM	3,25 mm	DIN EN 10255 (DIN 2440) SEAMLESS	P235GH/1.0305/A106	180 mm	0/439	
CWS-25-D16A-ROD.112	CWS	PE	D16A	25	MM	3,25 mm	DIN EN 10255 (DIN 2440) SEAMLESS	P235GH/1.0305/A106	426 mm	1/040	
CWS-25-D16A-ROD.112	CWS	PE	D16A	25	MM	3,25 mm	DIN EN 10255 (DIN 2440) SEAMLESS	P235GH/1.0305/A106	847,2 mm	2/067	
CWS-25-D16A-ROD.112	CWS	PE	D16A	25	MM	3,25 mm	DIN EN 10255 (DIN 2440) SEAMLESS	P235GH/1.0305/A106	120 mm	0/294	
CWS-25-D16A-ROD.112	CWS	PE	D16A	25	MM	3,25 mm	DIN EN 10255 (DIN 2440) SEAMLESS	P235GH/1.0305/A106	2040 mm	4/977	
CWS-25-D16A-ROD.112	CWS	PE	D16A	25	MM	3,25 mm	DIN EN 10255 (DIN 2440) SEAMLESS	P235GH/1.0305/A106	300 mm	0/732	
CWS-25-D16A-ROD.112	CWS	PE	D16A	25	MM	3,25 mm	DIN EN 10255 (DIN 2440) SEAMLESS	P235GH/1.0305/A106	120 mm	0/293	
CWS-25-D16A-ROD.112	CWS	PE	D16A	25	MM	3,25 mm	DIN EN 10255 (DIN 2440) SEAMLESS	P235GH/1.0305/A106	5091,6 mm	12/424	
CWS-25-D16A-ROD.112	CWS	PE	D16A	25	MM	3,25 mm	DIN EN 10255 (DIN 2440) SEAMLESS	P235GH/1.0305/A106	151,2 mm	0/369	
CWS-25-D16A-ROD.112	CWS	PE	D16A	25	MM	3,25 mm	DIN EN 10255 (DIN 2440) SEAMLESS	P235GH/1.0305/A106	240 mm	0/587	
CWS-25-D16A-ROD.112	CWS	PE	D16A	25	MM	3,25 mm	DIN EN 10255 (DIN 2440) SEAMLESS	P235GH/1.0305/A106	813,6 mm	1/984	
CWS-25-D16A-ROD.113	CWS	PE	D16A	25	MM	3,25 mm	DIN EN 10255 (DIN 2440) SEAMLESS	P235GH/1.0305/A106	240 mm	0/586	
CWS-25-D16A-ROD.113	CWS	PE	D16A	25	MM	3,25 mm	DIN EN 10255 (DIN 2440) SEAMLESS	P235GH/1.0305/A106	120 mm	0/293	
CWS-25-D16A-ROD.117	CWS	PE	D16A	15	MM	2,65 mm	DIN EN 10255 (DIN 2440) SEAMLESS	P235GH/1.0305/A106	120 mm	0/146	
CWS-25-D16A-ROD.117	CWS	PE	D16A	25	MM	3,25 mm	DIN EN 10255 (DIN 2440) SEAMLESS	P235GH/1.0305/A106	180 mm	0/439	
CWS-25-D16A-ROD.117	CWS	PE	D16A	25	MM	3,25 mm	DIN EN 10255 (DIN 2440) SEAMLESS	P235GH/1.0305/A106	2040 mm	4/977	
CWS-25-D16A-ROD.117	CWS	PE	D16A	25	MM	3,25 mm	DIN EN 10255 (DIN 2440) SEAMLESS	P235GH/1.0305/A106	847,2 mm	2/067	
CWS-25-D16A-ROD.117	CWS	PE	D16A	25	MM	3,25 mm	DIN EN 10255 (DIN 2440) SEAMLESS	P235GH/1.0305/A106	120 mm	0/294	
CWS-25-D16A-ROD.117	CWS	PE	D16A	25	MM	3,25 mm	DIN EN 10255 (DIN 2440) SEAMLESS	P235GH/1.0305/A106	813,6 mm	1/984	
CWS-25-D16A-ROD.117	CWS	PE	D16A	25	MM	3,25 mm	DIN EN 10255 (DIN 2440) SEAMLESS	P235GH/1.0305/A106	300 mm	0/732	

PIPE TAG	TYPE OF FLUID	CONNECTION	SPECI.	DN	UNITS	THICKNESS(mm)	NORMATIVE	MATERIAL	LENGHT	WEIGHT (Kg)	PRICE
CWS-25-D16A-ROD.117	CWS	PE	D16A	25	MM	3,25 mm	DIN EN 10255 (DIN 2440) SEAMLESS	P235GH/1.0305/A106	240 mm	0/587	
CWS-25-D16A-ROD.117	CWS	PE	D16A	25	MM	3,25 mm	DIN EN 10255 (DIN 2440) SEAMLESS	P235GH/1.0305/A106	120 mm	0/293	
CWS-25-D16A-ROD.117	CWS	PE	D16A	25	MM	3,25 mm	DIN EN 10255 (DIN 2440) SEAMLESS	P235GH/1.0305/A106	426 mm	1/040	
CWS-25-D16A-ROD.117	CWS	PE	D16A	25	MM	3,25 mm	DIN EN 10255 (DIN 2440) SEAMLESS	P235GH/1.0305/A106	151,2 mm	0/369	
CWS-25-D16A-ROD.117	CWS	PE	D16A	25	MM	3,25 mm	DIN EN 10255 (DIN 2440) SEAMLESS	P235GH/1.0305/A106	5091,6 mm	12/424	
CWS-32-D16A-ROD.104	CWS	PE	D16A	32	MM	3,25 mm	DIN EN 10255 (DIN 2440) SEAMLESS	P235GH/1.0305/A106	1326 mm	4/164	
CWS-32-D16A-ROD.104	CWS	PE	D16A	15	MM	2,65 mm	DIN EN 10255 (DIN 2440) SEAMLESS	P235GH/1.0305/A106	180 mm	0/220	
CWS-32-D16A-ROD.104	CWS	PE	D16A	15	MM	2,65 mm	DIN EN 10255 (DIN 2440) SEAMLESS	P235GH/1.0305/A106	120 mm	0/146	
CWS-32-D16A-ROD.104	CWS	PE	D16A	32	MM	3,25 mm	DIN EN 10255 (DIN 2440) SEAMLESS	P235GH/1.0305/A106	120 mm	0/377	
CWS-32-D16A-ROD.104	CWS	BE	D16A	100	MM	3,60 mm	DIN EN 10216-1 (DIN 2448) SEAMLESS	P235GH/1.0305/A106	240 mm	2/376	
CWS-32-D16A-ROD.104	CWS	PE	D16A	32	MM	3,25 mm	DIN EN 10255 (DIN 2440) SEAMLESS	P235GH/1.0305/A106	306 mm	0/963	
CWS-32-D16A-ROD.111	CWS	PE	D16A	25	MM	3,25 mm	DIN EN 10255 (DIN 2440) SEAMLESS	P235GH/1.0305/A106	120 mm	0/293	
CWS-32-D16A-ROD.111	CWS	PE	D16A	32	MM	3,25 mm	DIN EN 10255 (DIN 2440) SEAMLESS	P235GH/1.0305/A106	990 mm	3/109	
CWS-32-D16A-ROD.111	CWS	PE	D16A	32	MM	3,25 mm	DIN EN 10255 (DIN 2440) SEAMLESS	P235GH/1.0305/A106	3780 mm	11/868	
CWS-32-D16A-ROD.111	CWS	PE	D16A	32	MM	3,25 mm	DIN EN 10255 (DIN 2440) SEAMLESS	P235GH/1.0305/A106	794,4 mm	2/494	
CWS-32-D16A-ROD.121	CWS	PE	D16A	32	MM	3,25 mm	DIN EN 10255 (DIN 2440) SEAMLESS	P235GH/1.0305/A106	252 mm	0/790	
CWS-32-D16A-ROD.121	CWS	PE	D16A	32	MM	3,25 mm	DIN EN 10255 (DIN 2440) SEAMLESS	P235GH/1.0305/A106	640,8 mm	2/014	
CWS-32-D16A-ROD.121	CWS	BE	D16A	100	MM	3,60 mm	DIN EN 10216-1 (DIN 2448) SEAMLESS	P235GH/1.0305/A106	240 mm	2/376	
CWS-32-D16A-ROD.121	CWS	PE	D16A	32	MM	3,25 mm	DIN EN 10255 (DIN 2440) SEAMLESS	P235GH/1.0305/A106	268,8 mm	0/846	
CWS-32-D16A-ROD.121	CWS	PE	D16A	15	MM	2,65 mm	DIN EN 10255 (DIN 2440) SEAMLESS	P235GH/1.0305/A106	120 mm	0/146	
CWS-40-D16A-ROD.101	CWS	PE	D16A	40	MM	3,25 mm	DIN EN 10255 (DIN 2440) SEAMLESS	P235GH/1.0305/A106	242,4 mm	0/875	
CWS-40-D16A-ROD.101	CWS	PE	D16A	40	MM	3,25 mm	DIN EN 10255 (DIN 2440) SEAMLESS	P235GH/1.0305/A106	766,8 mm	2/768	
CWS-40-D16A-ROD.101	CWS	PE	D16A	40	MM	3,25 mm	DIN EN 10255 (DIN 2440) SEAMLESS	P235GH/1.0305/A106	122,4 mm	0/442	
CWS-40-D16A-ROD.101	CWS	PE	D16A	40	MM	3,25 mm	DIN EN 10255 (DIN 2440) SEAMLESS	P235GH/1.0305/A106	240 mm	0/866	
CWS-40-D16A-ROD.101	CWS	PE	D16A	40	MM	3,25 mm	DIN EN 10255 (DIN 2440) SEAMLESS	P235GH/1.0305/A106	129,6 mm	0/469	
CWS-40-D16A-ROD.101	CWS	PE	D16A	40	MM	3,25 mm	DIN EN 10255 (DIN 2440) SEAMLESS	P235GH/1.0305/A106	240 mm	0/868	
CWS-40-D16A-ROD.101	CWS	PE	D16A	40	MM	3,25 mm	DIN EN 10255 (DIN 2440) SEAMLESS	P235GH/1.0305/A106	962,4 mm	3/472	
CWS-40-D16A-ROD.101	CWS	PE	D16A	40	MM	3,25 mm	DIN EN 10255 (DIN 2440) SEAMLESS	P235GH/1.0305/A106	1963,2 mm	7/089	
CWS-40-D16A-ROD.101	CWS	PE	D16A	40	MM	3,25 mm	DIN EN 10255 (DIN 2440) SEAMLESS	P235GH/1.0305/A106	770,4 mm	2/780	
CWS-40-D16A-ROD.116	CWS	PE	D16A	40	MM	3,25 mm	DIN EN 10255 (DIN 2440) SEAMLESS	P235GH/1.0305/A106	2820 mm	10/179	
CWS-40-D16A-ROD.116	CWS	PE	D16A	40	MM	3,25 mm	DIN EN 10255 (DIN 2440) SEAMLESS	P235GH/1.0305/A106	180 mm	0/650	
CWS-40-D16A-ROD.116	CWS	PE	D16A	40	MM	3,25 mm	DIN EN 10255 (DIN 2440) SEAMLESS	P235GH/1.0305/A106	285,6 mm	1/033	
CWS-40-D16A-ROD.116	CWS	PE	D16A	40	MM	3,25 mm	DIN EN 10255 (DIN 2440) SEAMLESS	P235GH/1.0305/A106	249,6 mm	0/902	
CWS-40-D16A-ROD.116	CWS	PE	D16A	40	MM	3,25 mm	DIN EN 10255 (DIN 2440) SEAMLESS	P235GH/1.0305/A106	2094 mm	7/559	
CWS-65-D16A-ROD.122	CWS	BE	D16A	100	MM	3,60 mm	DIN EN 10216-1 (DIN 2448) SEAMLESS	P235GH/1.0305/A106	240 mm	2/376	
CWS-65-D16A-ROD.122	CWS	PE	D16A	15	MM	2,65 mm	DIN EN 10255 (DIN 2440) SEAMLESS	P235GH/1.0305/A106	120 mm	0/146	
CWS-65-D16A-ROD.122	CWS	BE	D16A	65	MM	2,90 mm	DIN EN 10216-1 (DIN 2448) SEAMLESS	P235GH/1.0305/A106	240 mm	0/866	
CWS-65-D16A-ROD.122	CWS	BE	D16A	65	MM	2,90 mm	DIN EN 10216-1 (DIN 2448) SEAMLESS	P235GH/1.0305/A106	120 mm	0/434	
CWS-65-D16A-ROD.122	CWS	BE	D16A	65	MM	2,90 mm	DIN EN 10216-1 (DIN 2448) SEAMLESS	P235GH/1.0305/A106	820,8 mm	2/963	
CWS-40-D16A-ROD.123	CWS	PE	D16A	40	MM	3,25 mm	DIN EN 10255 (DIN 2440) SEAMLESS	P235GH/1.0305/A106	147,6 mm	0/534	
CWS-40-D16A-ROD.123	CWS	PE	D16A	40	MM	3,25 mm	DIN EN 10255 (DIN 2440) SEAMLESS	P235GH/1.0305/A106	3153,6 mm	11/382	
CWS-40-D16A-ROD.123	CWS	PE	D16A	40	MM	3,25 mm	DIN EN 10255 (DIN 2440) SEAMLESS	P235GH/1.0305/A106	244,8 mm	0/882	
CWS-40-D16A-ROD.123	CWS	BE	D16A	100	MM	3,60 mm	DIN EN 10216-1 (DIN 2448) SEAMLESS	P235GH/1.0305/A106	240 mm	2/376	
CWS-40-D16A-ROD.123	CWS	PE	D16A	15	MM	2,65 mm	DIN EN 10255 (DIN 2440) SEAMLESS	P235GH/1.0305/A106	120 mm	0/146	
CWS-40-D16A-ROD.123	CWS	PE	D16A	40	MM	3,25 mm	DIN EN 10255 (DIN 2440) SEAMLESS	P235GH/1.0305/A106	5073,6 mm	18/315	
CWS-40-D16A-ROD.123	CWS	PE	D16A	40	MM	3,25 mm	DIN EN 10255 (DIN 2440) SEAMLESS	P235GH/1.0305/A106	35904 mm	129/614	
CWS-40-D16A-ROD.123	CWS	PE	D16A	40	MM	3,25 mm	DIN EN 10255 (DIN 2440) SEAMLESS	P235GH/1.0305/A106	3010,8 mm	10/870	
CWS-40-D16A-ROD.123	CWS	PE	D16A	40	MM	3,25 mm	DIN EN 10255 (DIN 2440) SEAMLESS	P235GH/1.0305/A106	822 mm	2/966	

PIPE TAG	TYPE OF FLUID	CONNECTION	SPECI.	DN	UNITS	THICKNESS(mm)	NORMATIVE	MATERIAL	LENGHT	WEIGHT (Kg)	PRICE
CWS-40-D16A-ROD.123	CWS	PE	D16A	40	MM	3,25 mm	DIN EN 10255 (DIN 2440) SEAMLESS	P235GH/1.0305/A106	784,8 mm	2/833	
CWS-65-D16A-ROD.124	CWS	BE	D16A	65	MM	2,90 mm	DIN EN 10216-1 (DIN 2448) SEAMLESS	P235GH/1.0305/A106	61,2 mm	0/323	
CWS-65-D16A-ROD.124	CWS	BE	D16A	65	MM	2,90 mm	DIN EN 10216-1 (DIN 2448) SEAMLESS	P235GH/1.0305/A106	578,4 mm	3/054	
CWS-65-D16A-ROD.124	CWS	BE	D16A	65	MM	2,90 mm	DIN EN 10216-1 (DIN 2448) SEAMLESS	P235GH/1.0305/A106	649,2 mm	3/430	
CWS-65-D16A-ROD.124	CWS	BE	D16A	65	MM	2,90 mm	DIN EN 10216-1 (DIN 2448) SEAMLESS	P235GH/1.0305/A106	2917,2 mm	15/404	
CWS-65-D16A-ROD.124	CWS	BE	D16A	65	MM	2,90 mm	DIN EN 10216-1 (DIN 2448) SEAMLESS	P235GH/1.0305/A106	23340 mm	123/234	
CWS-65-D16A-ROD.124	CWS	BE	D16A	65	MM	2,90 mm	DIN EN 10216-1 (DIN 2448) SEAMLESS	P235GH/1.0305/A106	298,8 mm	1/579	
CWS-65-D16A-ROD.124	CWS	PE	D16A	20	MM	2,65 mm	DIN EN 10255 (DIN 2440) SEAMLESS	P235GH/1.0305/A106	120 mm	0/190	
CWS-65-D16A-ROD.124	CWS	PE	D16A	20	MM	2,65 mm	DIN EN 10255 (DIN 2440) SEAMLESS	P235GH/1.0305/A106	120 mm	0/190	
CWS-65-D16A-ROD.124	CWS	BE	D16A	65	MM	2,90 mm	DIN EN 10216-1 (DIN 2448) SEAMLESS	P235GH/1.0305/A106	6254,4 mm	33/025	
CWS-65-D16A-ROD.124	CWS	BE	D16A	65	MM	2,90 mm	DIN EN 10216-1 (DIN 2448) SEAMLESS	P235GH/1.0305/A106	7980 mm	42/134	
CWS-65-D16A-ROD.124	CWS	BE	D16A	65	MM	2,90 mm	DIN EN 10216-1 (DIN 2448) SEAMLESS	P235GH/1.0305/A106	786 mm	4/147	
CWS-65-D16A-ROD.124	CWS	BE	D16A	65	MM	2,90 mm	DIN EN 10216-1 (DIN 2448) SEAMLESS	P235GH/1.0305/A106	6070,8 mm	32/054	
CWS-65-D16A-ROD.124	CWS	BE	D16A	65	MM	2,90 mm	DIN EN 10216-1 (DIN 2448) SEAMLESS	P235GH/1.0305/A106	1280,4 mm	6/758	
CWS-65-D16A-ROD.124	CWS	BE	D16A	65	MM	2,90 mm	DIN EN 10216-1 (DIN 2448) SEAMLESS	P235GH/1.0305/A106	76111,2 mm	401/869	
CWS-65-D16A-ROD.124	CWS	BE	D16A	65	MM	2,90 mm	DIN EN 10216-1 (DIN 2448) SEAMLESS	P235GH/1.0305/A106	758,4 mm	4/005	
CWS-80-D16A-ROD.105	CWS	BE	D16A	80		3,20 mm	DIN EN 10216-1 (DIN 2448) SEAMLESS	P235GH/1.0305/A106	234 mm	1/590	
CWS-80-D16A-ROD.105	CWS	BE	D16A	80		3,20 mm	DIN EN 10216-1 (DIN 2448) SEAMLESS	P235GH/1.0305/A106	180 mm	1/222	
CWS-80-D16A-ROD.105	CWS	BE	D16A	80		3,20 mm	DIN EN 10216-1 (DIN 2448) SEAMLESS	P235GH/1.0305/A106	180 mm	1/229	
CWS-80-D16A-ROD.105	CWS	BE	D16A	80		3,20 mm	DIN EN 10216-1 (DIN 2448) SEAMLESS	P235GH/1.0305/A106	993,6 mm	6/766	
CWS-80-D16A-ROD.105	CWS	BE	D16A	80		3,20 mm	DIN EN 10216-1 (DIN 2448) SEAMLESS	P235GH/1.0305/A106	240 mm	1/638	
CWS-80-D16A-ROD.105	CWS	BE	D16A	80		3,20 mm	DIN EN 10216-1 (DIN 2448) SEAMLESS	P235GH/1.0305/A106	1676,4 mm	11/414	
CWS-80-D16A-ROD.105	CWS	BE	D16A	80		3,20 mm	DIN EN 10216-1 (DIN 2448) SEAMLESS	P235GH/1.0305/A106	292,8 mm	1/993	
CWS-80-D16A-ROD.105	CWS	BE	D16A	80		3,20 mm	DIN EN 10216-1 (DIN 2448) SEAMLESS	P235GH/1.0305/A106	120 mm	0/818	
CWS-80-D16A-ROD.105	CWS	BE	D16A	80		3,20 mm	DIN EN 10216-1 (DIN 2448) SEAMLESS	P235GH/1.0305/A106	3009,6 mm	20/493	
CWS-80-D16A-ROD.105	CWS	PE	D16A	15		2,65 mm	DIN EN 10255 (DIN 2440) SEAMLESS	P235GH/1.0305/A106	120 mm	0/146	
CWS-80-D16A-ROD.105	CWS	BE	D16A	80		3,20 mm	DIN EN 10216-1 (DIN 2448) SEAMLESS	P235GH/1.0305/A106	786 mm	5/356	
CWS-80-D16A-ROD.105	CWS	BE	D16A	80		3,20 mm	DIN EN 10216-1 (DIN 2448) SEAMLESS	P235GH/1.0305/A106	153,6 mm	1/045	
CWS-80-D16A-ROD.105	CWS	BE	D16A	80		3,20 mm	DIN EN 10216-1 (DIN 2448) SEAMLESS	P235GH/1.0305/A106	240 mm	1/634	
CWS-80-D16A-ROD.105	CWS	BE	D16A	80		3,20 mm	DIN EN 10216-1 (DIN 2448) SEAMLESS	P235GH/1.0305/A106	240 mm	1/635	
CWS-80-D16A-ROD.105	CWS	BE	D16A	80		3,20 mm	DIN EN 10216-1 (DIN 2448) SEAMLESS	P235GH/1.0305/A106	240 mm	1/636	
CWS-80-D16A-ROD.105	CWS	BE	D16A	80		3,20 mm	DIN EN 10216-1 (DIN 2448) SEAMLESS	P235GH/1.0305/A106	120 mm	0/820	
KWR-100-D16A-ROD.122	KWR	BE	D16A	100	MM	3,60 mm	DIN EN 10216-1 (DIN 2448) SEAMLESS	P235GH/1.0305/A106	148,8 mm	1/474	
KWR-100-D16A-ROD.122	KWR	BE	D16A	100	MM	3,60 mm	DIN EN 10216-1 (DIN 2448) SEAMLESS	P235GH/1.0305/A106	1521,6 mm	15/070	
KWR-200-D16A-ROD.101	KWR	BE	D16A	200	MM	4,50 mm	DIN EN 10217-1 (DIN 2458) WELDED	P235GH/1.0305/A106	1224 mm	29/141	
KWR-200-D16A-ROD.102	KWR	BE	D16A	200	MM	4,50 mm	DIN EN 10217-1 (DIN 2458) WELDED	P235GH/1.0305/A106	1224 mm	29/141	
KWR-200-D16A-ROD.85	KWR	BE	D16A	200	MM	4,50 mm	DIN EN 10217-1 (DIN 2458) WELDED	P235GH/1.0305/A106	895,2 mm	21/319	
KWR-200-D16A-ROD.86	KWR	BE	D16A	200	MM	4,50 mm	DIN EN 10217-1 (DIN 2458) WELDED	P235GH/1.0305/A106	895,2 mm	21/319	
KWR-200-D16-A-ROD.93	KWR	BE	D16A	200	MM	4,50 mm	DIN EN 10217-1 (DIN 2458) WELDED	P235GH/1.0305/A106	480 mm	11/424	
KWR-200-D16-A-ROD.93	KWR	BE	D16A	200	MM	4,50 mm	DIN EN 10217-1 (DIN 2458) WELDED	P235GH/1.0305/A106	764,4 mm	18/204	
KWR-200-D16-A-ROD.94	KWR	BE	D16A	200	MM	4,50 mm	DIN EN 10217-1 (DIN 2458) WELDED	P235GH/1.0305/A106	480 mm	11/424	
KWR-200-D16-A-ROD.94	KWR	BE	D16A	200	MM	4,50 mm	DIN EN 10217-1 (DIN 2458) WELDED	P235GH/1.0305/A106	764,4 mm	18/204	
KWR-300-D16A-ROD.103	KWR	BE	D16A	300	MM	5,60 mm	DIN EN 10217-1 (DIN 2458) WELDED	P235GH/1.0305/A106	2612,4 mm	114/946	
KWR-300-D16A-ROD.103	KWR	BE	D16A	300	MM	5,60 mm	DIN EN 10217-1 (DIN 2458) WELDED	P235GH/1.0305/A106	750 mm	32/987	
KWR-300-D16A-ROD.103	KWR	BE	D16A	300	MM	5,60 mm	DIN EN 10217-1 (DIN 2458) WELDED	P235GH/1.0305/A106	4226,4 mm	185/955	
KWR-300-D16A-ROD.119	KWR	BE	D16A	300	MM	5,60 mm	DIN EN 10217-1 (DIN 2458) WELDED	P235GH/1.0305/A106	240 mm	10/564	
KWR-300-D16A-ROD.119	KWR	BE	D16A	300	MM	5,60 mm	DIN EN 10217-1 (DIN 2458) WELDED	P235GH/1.0305/A106	1170 mm	51/454	
KWR-300-D16A-ROD.119	KWR	BE	D16A	300	MM	5,60 mm	DIN EN 10217-1 (DIN 2458) WELDED	P235GH/1.0305/A106	237,6 mm	10/440	

IPE TAG	TYPE OF FLUID	CONNECTION	SPECI.	DN	UNITS	THICKNESS(mm)	NORMATIVE	MATERIAL	LENGHT	WEIGHT (Kg)	PRICE
KWR-300-D16A-ROD.119	KWR	BE	D16A	300	MM	5,60 mm	DIN EN 10217-1 (DIN 2458) WELDED	P235GH/1.0305/A106	832,8 mm	36/670	
KWR-300-D16A-ROD.119	KWR	BE	D16A	300	MM	5,60 mm	DIN EN 10217-1 (DIN 2458) WELDED	P235GH/1.0305/A106	318 mm	13/973	
KWR-300-D16A-ROD.119	KWR	BE	D16A	300	MM	5,60 mm	DIN EN 10217-1 (DIN 2458) WELDED	P235GH/1.0305/A106	4560 mm	200/640	
KWR-300-D16A-ROD.119	KWR	BE	D16A	300	MM	5,60 mm	DIN EN 10217-1 (DIN 2458) WELDED	P235GH/1.0305/A106	915,6 mm	40/307	
KWR-300-D16A-ROD.120	KWR	BE	D16A	300	MM	5,60 mm	DIN EN 10217-1 (DIN 2458) WELDED	P235GH/1.0305/A106	481,2 mm	21/165	
KWR-300-D16A-ROD.120	KWR	BE	D16A	300	MM	5,60 mm	DIN EN 10217-1 (DIN 2458) WELDED	P235GH/1.0305/A106	1682,4 mm	74/025	
KWR-300-D16A-ROD.120	KWR	BE	D16A	300	MM	5,60 mm	DIN EN 10217-1 (DIN 2458) WELDED	P235GH/1.0305/A106	732 mm	32/203	
KWR-300-D16A-ROD.120	KWR	BE	D16A	300	MM	5,60 mm	DIN EN 10217-1 (DIN 2458) WELDED	P235GH/1.0305/A106	1682,4 mm	74/026	
KWR-300-D16A-ROD.120	KWR	BE	D16A	300	MM	5,60 mm	DIN EN 10217-1 (DIN 2458) WELDED	P235GH/1.0305/A106	1682,4 mm	74/026	
KWR-300-D16A-ROD.120	KWR	BE	D16A	300	MM	5,60 mm	DIN EN 10217-1 (DIN 2458) WELDED	P235GH/1.0305/A106	1682,4 mm	74/026	
KWR-300-D16A-ROD.120	KWR	BE	D16A	300	MM	5,60 mm	DIN EN 10217-1 (DIN 2458) WELDED	P235GH/1.0305/A106	1682,4 mm	74/026	
KWR-300-D16A-ROD.120	KWR	BE	D16A	300	MM	5,60 mm	DIN EN 10217-1 (DIN 2458) WELDED	P235GH/1.0305/A106	478,8 mm	21/075	
KWR-300-D16A-ROD.120	KWR	BE	D16A	300	MM	5,60 mm	DIN EN 10217-1 (DIN 2458) WELDED	P235GH/1.0305/A106	1682,4 mm	74/026	
KWR-300-D16A-ROD.120	KWR	BE	D16A	300	MM	5,60 mm	DIN EN 10217-1 (DIN 2458) WELDED	P235GH/1.0305/A106	685,2 mm	30/165	
KWR-300-D16A-ROD.120	KWR	BE	D16A	300	MM	5,60 mm	DIN EN 10217-1 (DIN 2458) WELDED	P235GH/1.0305/A106	1682,4 mm	74/028	
KWR-300-D16A-ROD.120	KWR	BE	D16A	300	MM	5,60 mm	DIN EN 10217-1 (DIN 2458) WELDED	P235GH/1.0305/A106	478,8 mm	21/075	
KWR-300-D16A-ROD.120	KWR	BE	D16A	300	MM	5,60 mm	DIN EN 10217-1 (DIN 2458) WELDED	P235GH/1.0305/A106	1682,4 mm	74/026	
KWR-300-D16A-ROD.120	KWR	BE	D16A	300	MM	5,60 mm	DIN EN 10217-1 (DIN 2458) WELDED	P235GH/1.0305/A106	478,8 mm	21/075	
KWR-300-D16A-ROD.120	KWR	BE	D16A	300	MM	5,60 mm	DIN EN 10217-1 (DIN 2458) WELDED	P235GH/1.0305/A106	478,8 mm	21/075	
KWR-300-D16A-ROD.120	KWR	BE	D16A	300	MM	5,60 mm	DIN EN 10217-1 (DIN 2458) WELDED	P235GH/1.0305/A106	1827,6 mm	80/413	
KWR-300-D16A-ROD.120	KWR	BE	D16A	300	MM	5,60 mm	DIN EN 10217-1 (DIN 2458) WELDED	P235GH/1.0305/A106	781,2 mm	34/348	
KWR-300-D16A-ROD.120	KWR	BE	D16A	300	MM	5,60 mm	DIN EN 10217-1 (DIN 2458) WELDED	P235GH/1.0305/A106	481,2 mm	21/165	
KWR-300-D16A-ROD.120	KWR	BE	D16A	300	MM	5,60 mm	DIN EN 10217-1 (DIN 2458) WELDED	P235GH/1.0305/A106	478,8 mm	21/075	
KWR-300-D16A-ROD.120	KWR	BE	D16A	300	MM	5,60 mm	DIN EN 10217-1 (DIN 2458) WELDED	P235GH/1.0305/A106	481,2 mm	21/165	
KWR-300-D16A-ROD.120	KWR	BE	D16A	300	MM	5,60 mm	DIN EN 10217-1 (DIN 2458) WELDED	P235GH/1.0305/A106	453,6 mm	19/963	
KWR-300-D16A-ROD.120	KWR	BE	D16A	300	MM	5,60 mm	DIN EN 10217-1 (DIN 2458) WELDED	P235GH/1.0305/A106	1318,8 mm	58/010	
KWR-300-D16A-ROD.120	KWR	BE	D16A	300	MM	5,60 mm	DIN EN 10217-1 (DIN 2458) WELDED	P235GH/1.0305/A106	1024,8 mm	45/108	
KWR-300-D16A-ROD.120	KWR	BE	D16A	300	MM	5,60 mm	DIN EN 10217-1 (DIN 2458) WELDED	P235GH/1.0305/A106	2038,8 mm	89/717	
KWR-300-D16A-ROD.120	KWR	BE	D16A	300	MM	5,60 mm	DIN EN 10217-1 (DIN 2458) WELDED	P235GH/1.0305/A106	420 mm	18/480	
KWR-300-D16A-ROD.120	KWR	BE	D16A	300	MM	5,60 mm	DIN EN 10217-1 (DIN 2458) WELDED	P235GH/1.0305/A106	420 mm	18/480	
KWR-300-D16A-ROD.95	KWR	BE	D16A	300	MM	5,60 mm	DIN EN 10217-1 (DIN 2458) WELDED	P235GH/1.0305/A106	2612,4 mm	114/946	
KWR-300-D16A-ROD.95	KWR	BE	D16A	300	MM	5,60 mm	DIN EN 10217-1 (DIN 2458) WELDED	P235GH/1.0305/A106	3015,6 mm	132/674	
KWR-400-D16A-ROD.121	KWR	BE	D16A	400	MM	6,30 mm	DIN EN 10217-1 (DIN 2458) WELDED	P235GH/1.0305/A106	21237,6 mm	1325/206	
KWR-400-D16A-ROD.121	KWR	BE	D16A	400	MM	6,30 mm	DIN EN 10217-1 (DIN 2458) WELDED	P235GH/1.0305/A106	23522,4 mm	1467/774	
KWR-400-D16A-ROD.121	KWR	BE	D16A	400	MM	6,30 mm	DIN EN 10217-1 (DIN 2458) WELDED	P235GH/1.0305/A106	11606,4 mm	724/215	
KWR-400-D16A-ROD.121	KWR	BE	D16A	400	MM	6,30 mm	DIN EN 10217-1 (DIN 2458) WELDED	P235GH/1.0305/A106	25786,8 mm	1609/110	
KWS-150-D16-A-ROD.100	KWS	BE	D16A	150	MM	4,50 mm	DIN EN 10216-1 (DIN 2448) SEAMLESS	P235GH/1.0305/A106	500,4 mm	9/057	
KWS-150-D16-A-ROD.100	KWS	BE	D16A	150	MM	4,50 mm	DIN EN 10216-1 (DIN 2448) SEAMLESS	P235GH/1.0305/A106	307,2 mm	5/557	
KWS-150-D16-A-ROD.100	KWS	BE	D16A	150	MM	4,50 mm	DIN EN 10216-1 (DIN 2448) SEAMLESS	P235GH/1.0305/A106	933,6 mm	16/902	
KWS-150-D16A-ROD.73	KWS	BE	D16A	150	MM	4,50 mm	DIN EN 10216-1 (DIN 2448) SEAMLESS	P235GH/1.0305/A106	1645,2 mm	29/780	
KWS-150-D16A-ROD.73	KWS	BE	D16A	150	MM	4,50 mm	DIN EN 10216-1 (DIN 2448) SEAMLESS	P235GH/1.0305/A106	6444 mm	116/632	
KWS-150-D16A-ROD.73	KWS	BE	D16A	150	MM	4,50 mm	DIN EN 10216-1 (DIN 2448) SEAMLESS	P235GH/1.0305/A106	1460,4 mm	26/435	
KWS-150-D16A-ROD.73	KWS	BE	D16A	150	MM	4,50 mm	DIN EN 10216-1 (DIN 2448) SEAMLESS	P235GH/1.0305/A106	2005,2 mm	36/296	
KWS-150-D16A-ROD.73	KWS	BE	D16A	150	MM	4,50 mm	DIN EN 10216-1 (DIN 2448) SEAMLESS	P235GH/1.0305/A106	22282,8 mm	403/315	
KWS-150-D16A-ROD.74	KWS	BE	D16A	150	MM	4,50 mm	DIN EN 10216-1 (DIN 2448) SEAMLESS	P235GH/1.0305/A106	1728 mm	31/279	
KWS-150-D16A-ROD.74	KWS	BE	D16A	150	MM	4,50 mm	DIN EN 10216-1 (DIN 2448) SEAMLESS	P235GH/1.0305/A106	115,2 mm	2/088	
KWS-150-D16A-ROD.75	KWS	BE	D16A	150	MM	4,50 mm	DIN EN 10216-1 (DIN 2448) SEAMLESS	P235GH/1.0305/A106	23936,4 mm	433/243	
KWS-150-D16A-ROD.75	KWS	BE	D16A	150	MM	4,50 mm	DIN EN 10216-1 (DIN 2448) SEAMLESS	P235GH/1.0305/A106	2042,4 mm	36/969	

PIPE TAG	TYPE OF FLUID	CONNECTION	SPECI.	DN	UNITS	THICKNESS(mm)	NORMATIVE	MATERIAL	LENGHT	WEIGHT (Kg)	PRICE
KWS-150-D16-A-ROD.82	KWS	BE	D16A	150	MM	4,50 mm	DIN EN 10216-1 (DIN 2448) SEAMLESS	P235GH/1.0305/A106	60 mm	1/086	
KWS-150-D16-A-ROD.82	KWS	BE	D16A	150	MM	4,50 mm	DIN EN 10216-1 (DIN 2448) SEAMLESS	P235GH/1.0305/A106	24 mm	0/434	
KWS-150-D16-A-ROD.83	KWS	BE	D16A	150	MM	4,50 mm	DIN EN 10216-1 (DIN 2448) SEAMLESS	P235GH/1.0305/A106	410,4 mm	7/428	
KWS-150-D16-A-ROD.83	KWS	BE	D16A	150	MM	4,50 mm	DIN EN 10216-1 (DIN 2448) SEAMLESS	P235GH/1.0305/A106	1514,4 mm	27/421	
KWS-150-D16-A-ROD.87	KWS	BE	D16A	150	MM	4,50 mm	DIN EN 10216-1 (DIN 2448) SEAMLESS	P235GH/1.0305/A106	103,2 mm	1/871	
KWS-150-D16-A-ROD.89	KWS	BE	D16A	150	MM	4,50 mm	DIN EN 10216-1 (DIN 2448) SEAMLESS	P235GH/1.0305/A106	757,2 mm	13/705	
KWS-150-D16-A-ROD.89	KWS	BE	D16A	150	MM	4,50 mm	DIN EN 10216-1 (DIN 2448) SEAMLESS	P235GH/1.0305/A106	727,2 mm	13/160	
KWS-150-D16-A-ROD.89	KWS	BE	D16A	150	MM	4,50 mm	DIN EN 10216-1 (DIN 2448) SEAMLESS	P235GH/1.0305/A106	555,6 mm	10/056	
KWS-150-D16-A-ROD.89	KWS	BE	D16A	150	MM	4,50 mm	DIN EN 10216-1 (DIN 2448) SEAMLESS	P235GH/1.0305/A106	6958,8 mm	125/953	
KWS-150-D16-A-ROD.91	KWS	BE	D16A	150	MM	4,50 mm	DIN EN 10216-1 (DIN 2448) SEAMLESS	P235GH/1.0305/A106	421,2 mm	7/615	
KWS-150-D16-A-ROD.91	KWS	BE	D16A	150	MM	4,50 mm	DIN EN 10216-1 (DIN 2448) SEAMLESS	P235GH/1.0305/A106	1897,2 mm	34/343	
KWS-150-D16-A-ROD.91	KWS	BE	D16A	150	MM	4,50 mm	DIN EN 10216-1 (DIN 2448) SEAMLESS	P235GH/1.0305/A106	168 mm	3/041	
KWS-150-D16-A-ROD.92	KWS	BE	D16A	150	MM	4,50 mm	DIN EN 10216-1 (DIN 2448) SEAMLESS	P235GH/1.0305/A106	500,4 mm	9/057	
KWS-150-D16-A-ROD.92	KWS	BE	D16A	150	MM	4,50 mm	DIN EN 10216-1 (DIN 2448) SEAMLESS	P235GH/1.0305/A106	307,2 mm	5/557	
KWS-150-D16-A-ROD.92	KWS	BE	D16A	150	MM	4,50 mm	DIN EN 10216-1 (DIN 2448) SEAMLESS	P235GH/1.0305/A106	1483,2 mm	26/850	
KWS-150-D16-A-ROD.92	KWS	BE	D16A	150	MM	4,50 mm	DIN EN 10216-1 (DIN 2448) SEAMLESS	P235GH/1.0305/A106	321,6 mm	5/821	
KWS-150-D16-A-ROD.96	KWS	BE	D16A	150	MM	4,50 mm	DIN EN 10216-1 (DIN 2448) SEAMLESS	P235GH/1.0305/A106	60 mm	1/086	
KWS-150-D16-A-ROD.96	KWS	BE	D16A	150	MM	4,50 mm	DIN EN 10216-1 (DIN 2448) SEAMLESS	P235GH/1.0305/A106	871,2 mm	15/772	
KWS-150-D16-A-ROD.98	KWS	BE	D16A	150	MM	4,50 mm	DIN EN 10216-1 (DIN 2448) SEAMLESS	P235GH/1.0305/A106	2918,4 mm	52/827	
KWS-150-D16-A-ROD.98	KWS	BE	D16A	150	MM	4,50 mm	DIN EN 10216-1 (DIN 2448) SEAMLESS	P235GH/1.0305/A106	523,2 mm	9/473	
KWS-150-D16-A-ROD.98	KWS	BE	D16A	150	MM	4,50 mm	DIN EN 10216-1 (DIN 2448) SEAMLESS	P235GH/1.0305/A106	1216,8 mm	22/023	
KWS-150-D16-A-ROD.99	KWS	BE	D16A	150	MM	4,50 mm	DIN EN 10216-1 (DIN 2448) SEAMLESS	P235GH/1.0305/A106	279,6 mm	5/057	
KWS-150-D16-A-ROD.99	KWS	BE	D16A	150	MM	4,50 mm	DIN EN 10216-1 (DIN 2448) SEAMLESS	P235GH/1.0305/A106	421,2 mm	7/615	
KWS-150-D16-A-ROD.99	KWS	BE	D16A	150	MM	4,50 mm	DIN EN 10216-1 (DIN 2448) SEAMLESS	P235GH/1.0305/A106	1897,2 mm	34/343	
KWS-150-D16-A-ROD.99	KWS	BE	D16A	150	MM	4,50 mm	DIN EN 10216-1 (DIN 2448) SEAMLESS	P235GH/1.0305/A106	123,6 mm	2/234	
KWS-200-D16A-ROD.76	KWS	BE	D16A	80	MM	3,20 mm	DIN EN 10216-1 (DIN 2448) SEAMLESS	P235GH/1.0305/A106	620,4 mm	4/222	
KWS-200-D16A-ROD.76	KWS	BE	D16A	80	MM	3,20 mm	DIN EN 10216-1 (DIN 2448) SEAMLESS	P235GH/1.0305/A106	142,8 mm	0/974	
KWS-200-D16A-ROD.76	KWS	BE	D16A	200	MM	4,50 mm	DIN EN 10217-1 (DIN 2458) WELDED	P235GH/1.0305/A106	992,4 mm	23/615	
KWS-200-D16A-ROD.76	KWS	BE	D16A	200	MM	4,50 mm	DIN EN 10217-1 (DIN 2458) WELDED	P235GH/1.0305/A106	2200,8 mm	52/377	
KWS-200-D16A-ROD.76	KWS	BE	D16A	200	MM	4,50 mm	DIN EN 10217-1 (DIN 2458) WELDED	P235GH/1.0305/A106	3144 mm	74/840	
KWS-200-D16A-ROD.76	KWS	BE	D16A	200	MM	4,50 mm	DIN EN 10217-1 (DIN 2458) WELDED	P235GH/1.0305/A106	1488 mm	35/405	
KWS-200-D16A-ROD.76	KWS	BE	D16A	200	MM	4,50 mm	DIN EN 10217-1 (DIN 2458) WELDED	P235GH/1.0305/A106	8078,4 mm	192/267	
KWS-200-D16A-ROD.76	KWS	BE	D16A	200	MM	4,50 mm	DIN EN 10217-1 (DIN 2458) WELDED	P235GH/1.0305/A106	822 mm	19/557	
KWS-200-D16A-ROD.76	KWS	BE	D16A	200	MM	4,50 mm	DIN EN 10217-1 (DIN 2458) WELDED	P235GH/1.0305/A106	540 mm	12/860	
KWS-200-D16A-ROD.76	KWS	BE	D16A	200	MM	4,50 mm	DIN EN 10217-1 (DIN 2458) WELDED	P235GH/1.0305/A106	380,4 mm	9/041	
KWS-200-D16A-ROD.76	KWS	BE	D16A	200	MM	4,50 mm	DIN EN 10217-1 (DIN 2458) WELDED	P235GH/1.0305/A106	120 mm	2/847	
KWS-200-D16A-ROD.76	KWS	BE	D16A	200	MM	4,50 mm	DIN EN 10217-1 (DIN 2458) WELDED	P235GH/1.0305/A106	300 mm	7/136	
KWS-200-D16A-ROD.76	KWS	BE	D16A	200	MM	4,50 mm	DIN EN 10217-1 (DIN 2458) WELDED	P235GH/1.0305/A106	380,4 mm	9/041	
KWS-200-D16A-ROD.76	KWS	BE	D16A	200	MM	4,50 mm	DIN EN 10217-1 (DIN 2458) WELDED	P235GH/1.0305/A106	402 mm	9/557	
KWS-200-D16A-ROD.76	KWS	BE	D16A	200	MM	4,50 mm	DIN EN 10217-1 (DIN 2458) WELDED	P235GH/1.0305/A106	300 mm	7/126	
KWS-200-D16A-ROD.76	KWS	BE	D16A	200	MM	4,50 mm	DIN EN 10217-1 (DIN 2458) WELDED	P235GH/1.0305/A106	818,4 mm	19/482	
KWS-200-D16A-ROD.76	KWS	BE	D16A	200	MM	4,50 mm	DIN EN 10217-1 (DIN 2458) WELDED	P235GH/1.0305/A106	174 mm	4/139	
KWS-200-D16A-ROD.81	KWS	BE	D16A	200	MM	4,50 mm	DIN EN 10217-1 (DIN 2458) WELDED	P235GH/1.0305/A106	708 mm	16/851	
KWS-200-D16A-ROD.81	KWS	BE	D16A	200	MM	4,50 mm	DIN EN 10217-1 (DIN 2458) WELDED	P235GH/1.0305/A106	8382 mm	199/481	
KWS-200-D16A-ROD.81	KWS	BE	D16A	200	MM	4,50 mm	DIN EN 10217-1 (DIN 2458) WELDED	P235GH/1.0305/A106	193,2 mm	4/597	
KWS-200-D16A-ROD.81	KWS	BE	D16A	200	MM	4,50 mm	DIN EN 10217-1 (DIN 2458) WELDED	P235GH/1.0305/A106	2071,2 mm	49/304	
KWS-200-D16A-ROD.81	KWS	BE	D16A	200	MM	4,50 mm	DIN EN 10217-1 (DIN 2458) WELDED	P235GH/1.0305/A106	1515,6 mm	36/057	
KWS-200-D16A-ROD.81	KWS	BE	D16A	200	MM	4,50 mm	DIN EN 10217-1 (DIN 2458) WELDED	P235GH/1.0305/A106	1749,6 mm	41/630	

IPE TAG	TYPE OF FLUID	CONNECTION	SPECI.	DN	UNITS	THICKNESS(mm)	NORMATIVE	MATERIAL	LENGHT	WEIGHT (Kg)	PRICE
KWS-200-D16A-ROD.81	KWS	BE	D16A	200	MM	4,50 mm	DIN EN 10217-1 (DIN 2458) WELDED	P235GH/1.0305/A106	501,6 mm	11/946	
KWS-200-D16A-ROD.81	KWS	BE	D16A	200	MM	4,50 mm	DIN EN 10217-1 (DIN 2458) WELDED	P235GH/1.0305/A106	682,8 mm	16/253	
KWS-200-D16A-ROD.81	KWS	BE	D16A	200	MM	4,50 mm	DIN EN 10217-1 (DIN 2458) WELDED	P235GH/1.0305/A106	576 mm	13/709	
KWS-200-D16A-ROD.81	KWS	BE	D16A	200	MM	4,50 mm	DIN EN 10217-1 (DIN 2458) WELDED	P235GH/1.0305/A106	300 mm	7/136	
KWS-200-D16A-ROD.81	KWS	BE	D16A	200	MM	4,50 mm	DIN EN 10217-1 (DIN 2458) WELDED	P235GH/1.0305/A106	300 mm	7/126	
KWS-25-D16A-ROD.77	KWS	PE	D16A	25	MM	3,25 mm	DIN EN 10255 (DIN 2440) SEAMLESS	P235GH/1.0305/A106	916,8 mm	2/238	
KWS-25-D16A-ROD.77	KWS	PE	D16A	25	MM	3,25 mm	DIN EN 10255 (DIN 2440) SEAMLESS	P235GH/1.0305/A106	169,2 mm	0/414	
KWS-25-D16A-ROD.77	KWS	PE	D16A	25	MM	3,25 mm	DIN EN 10255 (DIN 2440) SEAMLESS	P235GH/1.0305/A106	1692 mm	4/128	
KWS-25-D16A-ROD.77	KWS	PE	D16A	25	MM	3,25 mm	DIN EN 10255 (DIN 2440) SEAMLESS	P235GH/1.0305/A106	193,2 mm	0/471	
KWS-25-D16A-ROD.77	KWS	PE	D16A	25	MM	3,25 mm	DIN EN 10255 (DIN 2440) SEAMLESS	P235GH/1.0305/A106	849,6 mm	2/073	
KWS-25-D16A-ROD.77	KWS	PE	D16A	25	MM	3,25 mm	DIN EN 10255 (DIN 2440) SEAMLESS	P235GH/1.0305/A106	974,4 mm	2/376	
KWS-25-D16-A-ROD.84	KWS	PE	D16A	25	MM	3,25 mm	DIN EN 10255 (DIN 2440) SEAMLESS	P235GH/1.0305/A106	2473,2 mm	6/036	
KWS-25-D16-A-ROD.84	KWS	PE	D16A	25	MM	3,25 mm	DIN EN 10255 (DIN 2440) SEAMLESS	P235GH/1.0305/A106	126 mm	0/307	
KWS-25-D16-A-ROD.84	KWS	PE	D16A	25	MM	3,25 mm	DIN EN 10255 (DIN 2440) SEAMLESS	P235GH/1.0305/A106	109,2 mm	0/266	
KWS-25-D16-A-ROD.84	KWS	PE	D16A	25	MM	3,25 mm	DIN EN 10255 (DIN 2440) SEAMLESS	P235GH/1.0305/A106	1788 mm	4/363	
KWS-25-D16-A-ROD.84	KWS	PE	D16A	25	MM	3,25 mm	DIN EN 10255 (DIN 2440) SEAMLESS	P235GH/1.0305/A106	1226,4 mm	2/993	
KWS-25-D16-A-ROD.84	KWS	PE	D16A	25	MM	3,25 mm	DIN EN 10255 (DIN 2440) SEAMLESS	P235GH/1.0305/A106	120 mm	0/293	
KWS-25-D16-A-ROD.88	KWS	PE	D16A	25	MM	3,25 mm	DIN EN 10255 (DIN 2440) SEAMLESS	P235GH/1.0305/A106	120 mm	0/294	
KWS-25-D16-A-ROD.88	KWS	PE	D16A	25	MM	3,25 mm	DIN EN 10255 (DIN 2440) SEAMLESS	P235GH/1.0305/A106	200,4 mm	0/490	
KWS-25-D16-A-ROD.88	KWS	PE	D16A	25	MM	3,25 mm	DIN EN 10255 (DIN 2440) SEAMLESS	P235GH/1.0305/A106	1616,4 mm	3/944	
KWS-25-D16-A-ROD.88	KWS	PE	D16A	25	MM	3,25 mm	DIN EN 10255 (DIN 2440) SEAMLESS	P235GH/1.0305/A106	415,2 mm	1/014	
KWS-25-D16-A-ROD.88	KWS	PE	D16A	25	MM	3,25 mm	DIN EN 10255 (DIN 2440) SEAMLESS	P235GH/1.0305/A106	760,8 mm	1/858	
KWS-25-D16-A-ROD.88	KWS	PE	D16A	25	MM	3,25 mm	DIN EN 10255 (DIN 2440) SEAMLESS	P235GH/1.0305/A106	135,6 mm	0/331	
KWS-25-D16-A-ROD.88	KWS	PE	D16A	25	MM	3,25 mm	DIN EN 10255 (DIN 2440) SEAMLESS	P235GH/1.0305/A106	142,8 mm	0/349	
KWS-25-D16-A-ROD.88	KWS	PE	D16A	25	MM	3,25 mm	DIN EN 10255 (DIN 2440) SEAMLESS	P235GH/1.0305/A106	842,4 mm	2/055	
KWS-25-D16-A-ROD.88	KWS	PE	D16A	25	MM	3,25 mm	DIN EN 10255 (DIN 2440) SEAMLESS	P235GH/1.0305/A106	4441,2 mm	10/836	
KWS-25-D16-A-ROD.88	KWS	PE	D16A	25	MM	3,25 mm	DIN EN 10255 (DIN 2440) SEAMLESS	P235GH/1.0305/A106	120 mm	0/293	
KWS-25-D16-A-ROD.97	KWS	PE	D16A	25	MM	3,25 mm	DIN EN 10255 (DIN 2440) SEAMLESS	P235GH/1.0305/A106	2564,4 mm	6/258	
KWS-25-D16-A-ROD.97	KWS	PE	D16A	25	MM	3,25 mm	DIN EN 10255 (DIN 2440) SEAMLESS	P235GH/1.0305/A106	165,6 mm	0/404	
KWS-25-D16-A-ROD.97	KWS	PE	D16A	25	MM	3,25 mm	DIN EN 10255 (DIN 2440) SEAMLESS	P235GH/1.0305/A106	170,4 mm	0/416	
KWS-25-D16-A-ROD.97	KWS	PE	D16A	25	MM	3,25 mm	DIN EN 10255 (DIN 2440) SEAMLESS	P235GH/1.0305/A106	775,2 mm	1/891	
KWS-300-D16A-ROD.80	KWS	BE	D16A	300	MM	5,60 mm	DIN EN 10217-1 (DIN 2458) WELDED	P235GH/1.0305/A106	2110,8 mm	92/881	
KWS-300-D16A-ROD.80	KWS	BE	D16A	300	MM	5,60 mm	DIN EN 10217-1 (DIN 2458) WELDED	P235GH/1.0305/A106	5208 mm	229/148	
KWS-300-D16A-ROD.80	KWS	BE	D16A	300	MM	5,60 mm	DIN EN 10217-1 (DIN 2458) WELDED	P235GH/1.0305/A106	13711,2 mm	603/270	
KWS-40-D16A-ROD.104	KWS	PE	D16A	40	MM	3,25 mm	DIN EN 10255 (DIN 2440) SEAMLESS	P235GH/1.0305/A106	3100,8 mm	11/192	
KWS-40-D16A-ROD.104	KWS	PE	D16A	40	MM	3,25 mm	DIN EN 10255 (DIN 2440) SEAMLESS	P235GH/1.0305/A106	1214,4 mm	4/382	
KWS-40-D16A-ROD.104	KWS	PE	D16A	40	MM	3,25 mm	DIN EN 10255 (DIN 2440) SEAMLESS	P235GH/1.0305/A106	504 mm	1/819	
KWS-40-D16A-ROD.104	KWS	PE	D16A	40	MM	3,25 mm	DIN EN 10255 (DIN 2440) SEAMLESS	P235GH/1.0305/A106	817,2 mm	2/952	
KWS-40-D16A-ROD.104	KWS	PE	D16A	40	MM	3,25 mm	DIN EN 10255 (DIN 2440) SEAMLESS	P235GH/1.0305/A106	2334 mm	8/427	
KWS-40-D16A-ROD.104	KWS	PE	D16A	40	MM	3,25 mm	DIN EN 10255 (DIN 2440) SEAMLESS	P235GH/1.0305/A106	5798,4 mm	20/932	
KWS-40-D16A-ROD.106	KWS	PE	D16A	40	MM	3,25 mm	DIN EN 10255 (DIN 2440) SEAMLESS	P235GH/1.0305/A106	8978,4 mm	32/413	
KWS-40-D16A-ROD.106	KWS	PE	D16A	40	MM	3,25 mm	DIN EN 10255 (DIN 2440) SEAMLESS	P235GH/1.0305/A106	817,2 mm	2/952	
KWS-40-D16A-ROD.106	KWS	PE	D16A	40	MM	3,25 mm	DIN EN 10255 (DIN 2440) SEAMLESS	P235GH/1.0305/A106	2334 mm	8/427	
KWS-40-D16A-ROD.106	KWS	PE	D16A	40	MM	3,25 mm	DIN EN 10255 (DIN 2440) SEAMLESS	P235GH/1.0305/A106	504 mm	1/819	
KWS-40-D16A-ROD.108	KWS	PE	D16A	40	MM	3,25 mm	DIN EN 10255 (DIN 2440) SEAMLESS	P235GH/1.0305/A106	817,2 mm	2/952	
KWS-40-D16A-ROD.108	KWS	PE	D16A	40	MM	3,25 mm	DIN EN 10255 (DIN 2440) SEAMLESS	P235GH/1.0305/A106	2334 mm	8/427	
KWS-40-D16A-ROD.108	KWS	PE	D16A	40	MM	3,25 mm	DIN EN 10255 (DIN 2440) SEAMLESS	P235GH/1.0305/A106	8978,4 mm	32/413	
KWS-40-D16A-ROD.108	KWS	PE	D16A	40	MM	3,25 mm	DIN EN 10255 (DIN 2440) SEAMLESS	P235GH/1.0305/A106	504 mm	1/819	

IPE TAG	TYPE OF FLUID	CONNECTION	SPECI.	DN	UNITS	THICKNESS(mm)	NORMATIVE	MATERIAL	LENGHT	WEIGHT (Kg)	PRICE
KWS-40-D16A-ROD.110	KWS	PE	D16A	40	MM	3,25 mm	DIN EN 10255 (DIN 2440) SEAMLESS	P235GH/1.0305/A106	817,2 mm	2/952	
KWS-40-D16A-ROD.110	KWS	PE	D16A	40	MM	3,25 mm	DIN EN 10255 (DIN 2440) SEAMLESS	P235GH/1.0305/A106	2550 mm	9/207	
KWS-40-D16A-ROD.110	KWS	PE	D16A	40	MM	3,25 mm	DIN EN 10255 (DIN 2440) SEAMLESS	P235GH/1.0305/A106	288 mm	1/039	
KWS-40-D16A-ROD.110	KWS	PE	D16A	40	MM	3,25 mm	DIN EN 10255 (DIN 2440) SEAMLESS	P235GH/1.0305/A106	238,8 mm	0/863	
KWS-40-D16A-ROD.110	KWS	PE	D16A	40	MM	3,25 mm	DIN EN 10255 (DIN 2440) SEAMLESS	P235GH/1.0305/A106	8776,8 mm	31/683	
KWS-40-D16A-ROD.110	KWS	PE	D16A	40	MM	3,25 mm	DIN EN 10255 (DIN 2440) SEAMLESS	P235GH/1.0305/A106	135,6 mm	0/491	
KWS-40-D16A-ROD.112	KWS	PE	D16A	40	MM	3,25 mm	DIN EN 10255 (DIN 2440) SEAMLESS	P235GH/1.0305/A106	817,2 mm	2/952	
KWS-40-D16A-ROD.112	KWS	PE	D16A	40	MM	3,25 mm	DIN EN 10255 (DIN 2440) SEAMLESS	P235GH/1.0305/A106	2334 mm	8/427	
KWS-40-D16A-ROD.112	KWS	PE	D16A	40	MM	3,25 mm	DIN EN 10255 (DIN 2440) SEAMLESS	P235GH/1.0305/A106	8978,4 mm	32/413	
KWS-40-D16A-ROD.112	KWS	PE	D16A	40	MM	3,25 mm	DIN EN 10255 (DIN 2440) SEAMLESS	P235GH/1.0305/A106	504 mm	1/819	
KWS-50-D16A-ROD.105	KWS	PE	D16A	50	MM	3,65 mm	DIN EN 10255 (DIN 2440) SEAMLESS	P235GH/1.0305/A106	284,4 mm	1/453	
KWS-50-D16A-ROD.105	KWS	PE	D16A	50	MM	3,65 mm	DIN EN 10255 (DIN 2440) SEAMLESS	P235GH/1.0305/A106	3764,4 mm	19/198	
KWS-50-D16A-ROD.105	KWS	PE	D16A	50	MM	3,65 mm	DIN EN 10255 (DIN 2440) SEAMLESS	P235GH/1.0305/A106	2071,2 mm	10/562	
KWS-50-D16A-ROD.105	KWS	PE	D16A	50	MM	3,65 mm	DIN EN 10255 (DIN 2440) SEAMLESS	P235GH/1.0305/A106	589,2 mm	3/004	
KWS-50-D16A-ROD.105	KWS	PE	D16A	50	MM	3,65 mm	DIN EN 10255 (DIN 2440) SEAMLESS	P235GH/1.0305/A106	259,2 mm	1/320	
KWS-50-D16A-ROD.105	KWS	PE	D16A	50	MM	3,65 mm	DIN EN 10255 (DIN 2440) SEAMLESS	P235GH/1.0305/A106	120 mm	0/614	
KWS-50-D16A-ROD.105	KWS	PE	D16A	50	MM	3,65 mm	DIN EN 10255 (DIN 2440) SEAMLESS	P235GH/1.0305/A106	4669,2 mm	23/815	
KWS-50-D16A-ROD.105	KWS	PE	D16A	50	MM	3,65 mm	DIN EN 10255 (DIN 2440) SEAMLESS	P235GH/1.0305/A106	1653,6 mm	8/436	
KWS-50-D16A-ROD.105	KWS	PE	D16A	50	MM	3,65 mm	DIN EN 10255 (DIN 2440) SEAMLESS	P235GH/1.0305/A106	564 mm	2/878	
KWS-50-D16A-ROD.107	KWS	PE	D16A	50	MM	3,65 mm	DIN EN 10255 (DIN 2440) SEAMLESS	P235GH/1.0305/A106	500,4 mm	2/554	
KWS-50-D16A-ROD.107	KWS	PE	D16A	50	MM	3,65 mm	DIN EN 10255 (DIN 2440) SEAMLESS	P235GH/1.0305/A106	8970 mm	45/750	
KWS-50-D16A-ROD.107	KWS	PE	D16A	50	MM	3,65 mm	DIN EN 10255 (DIN 2440) SEAMLESS	P235GH/1.0305/A106	2318,4 mm	11/823	
KWS-50-D16A-ROD.107	KWS	PE	D16A	50	MM	3,65 mm	DIN EN 10255 (DIN 2440) SEAMLESS	P235GH/1.0305/A106	813,6 mm	4/152	
KWS-50-D16A-ROD.109	KWS	PE	D16A	50	MM	3,65 mm	DIN EN 10255 (DIN 2440) SEAMLESS	P235GH/1.0305/A106	500,4 mm	2/554	
KWS-50-D16A-ROD.109	KWS	PE	D16A	50	MM	3,65 mm	DIN EN 10255 (DIN 2440) SEAMLESS	P235GH/1.0305/A106	8970 mm	45/750	
KWS-50-D16A-ROD.109	KWS	PE	D16A	50	MM	3,65 mm	DIN EN 10255 (DIN 2440) SEAMLESS	P235GH/1.0305/A106	2318,4 mm	11/823	
KWS-50-D16A-ROD.109	KWS	PE	D16A	50	MM	3,65 mm	DIN EN 10255 (DIN 2440) SEAMLESS	P235GH/1.0305/A106	813,6 mm	4/152	
KWS-50-D16A-ROD.111	KWS	PE	D16A	50	MM	3,65 mm	DIN EN 10255 (DIN 2440) SEAMLESS	P235GH/1.0305/A106	500,4 mm	2/554	
KWS-50-D16A-ROD.111	KWS	PE	D16A	50	MM	3,65 mm	DIN EN 10255 (DIN 2440) SEAMLESS	P235GH/1.0305/A106	8970 mm	45/750	
KWS-50-D16A-ROD.111	KWS	PE	D16A	50	MM	3,65 mm	DIN EN 10255 (DIN 2440) SEAMLESS	P235GH/1.0305/A106	2318,4 mm	11/823	
KWS-50-D16A-ROD.111	KWS	PE	D16A	50	MM	3,65 mm	DIN EN 10255 (DIN 2440) SEAMLESS	P235GH/1.0305/A106	813,6 mm	4/152	
KWS-50-D16A-ROD.113	KWS	PE	D16A	50	MM	3,65 mm	DIN EN 10255 (DIN 2440) SEAMLESS	P235GH/1.0305/A106	500,4 mm	2/554	
KWS-50-D16A-ROD.113	KWS	PE	D16A	50	MM	3,65 mm	DIN EN 10255 (DIN 2440) SEAMLESS	P235GH/1.0305/A106	8970 mm	45/750	
KWS-50-D16A-ROD.113	KWS	PE	D16A	50	MM	3,65 mm	DIN EN 10255 (DIN 2440) SEAMLESS	P235GH/1.0305/A106	2318,4 mm	11/823	
KWS-50-D16A-ROD.113	KWS	PE	D16A	50	MM	3,65 mm	DIN EN 10255 (DIN 2440) SEAMLESS	P235GH/1.0305/A106	813,6 mm	4/152	
KWS-50-D16A-ROD.114	KWS	PE	D16A	50	MM	3,65 mm	DIN EN 10255 (DIN 2440) SEAMLESS	P235GH/1.0305/A106	500,4 mm	2/554	
KWS-50-D16A-ROD.114	KWS	PE	D16A	50	MM	3,65 mm	DIN EN 10255 (DIN 2440) SEAMLESS	P235GH/1.0305/A106	2311,2 mm	11/786	
KWS-50-D16A-ROD.114	KWS	PE	D16A	50	MM	3,65 mm	DIN EN 10255 (DIN 2440) SEAMLESS	P235GH/1.0305/A106	913,2 mm	4/660	
KWS-50-D16A-ROD.114	KWS	PE	D16A	50	MM	3,65 mm	DIN EN 10255 (DIN 2440) SEAMLESS	P235GH/1.0305/A106	1518 mm	7/742	
KWS-50-D16A-ROD.115	KWS	PE	D16A	50	MM	3,65 mm	DIN EN 10255 (DIN 2440) SEAMLESS	P235GH/1.0305/A106	2311,2 mm	11/786	
KWS-50-D16A-ROD.115	KWS	PE	D16A	50	MM	3,65 mm	DIN EN 10255 (DIN 2440) SEAMLESS	P235GH/1.0305/A106	1518 mm	7/742	
KWS-50-D16A-ROD.115	KWS	PE	D16A	50	MM	3,65 mm	DIN EN 10255 (DIN 2440) SEAMLESS	P235GH/1.0305/A106	913,2 mm	4/660	
KWS-50-D16A-ROD.115	KWS	PE	D16A	50	MM	3,65 mm	DIN EN 10255 (DIN 2440) SEAMLESS	P235GH/1.0305/A106	500,4 mm	2/554	
KWS-50-D16A-ROD.116	KWS	PE	D16A	50	MM	3,65 mm	DIN EN 10255 (DIN 2440) SEAMLESS	P235GH/1.0305/A106	2311,2 mm	11/786	
KWS-50-D16A-ROD.116	KWS	PE	D16A	50	MM	3,65 mm	DIN EN 10255 (DIN 2440) SEAMLESS	P235GH/1.0305/A106	1518 mm	7/742	
KWS-50-D16A-ROD.116	KWS	PE	D16A	50	MM	3,65 mm	DIN EN 10255 (DIN 2440) SEAMLESS	P235GH/1.0305/A106	913,2 mm	4/660	
KWS-50-D16A-ROD.116	KWS	PE	D16A	50	MM	3,65 mm	DIN EN 10255 (DIN 2440) SEAMLESS	P235GH/1.0305/A106	500,4 mm	2/554	
KWS-50-D16A-ROD.117	KWS	PE	D16A	50	MM	3,65 mm	DIN EN 10255 (DIN 2440) SEAMLESS	P235GH/1.0305/A106	2311,2 mm	11/786	

PIPE TAG	TYPE OF FLUID	CONNECTION	SPECI.	DN	UNITS	THICKNESS(mm)	NORMATIVE	MATERIAL	LENGHT	WEIGHT (Kg)	PRICE
KWS-50-D16A-ROD.117	KWS	PE	D16A	50	MM	3,65 mm	DIN EN 10255 (DIN 2440) SEAMLESS	P235GH/1.0305/A106	1518 mm	7/742	
KWS-50-D16A-ROD.117	KWS	PE	D16A	50	MM	3,65 mm	DIN EN 10255 (DIN 2440) SEAMLESS	P235GH/1.0305/A106	913,2 mm	4/660	
KWS-50-D16A-ROD.117	KWS	PE	D16A	50	MM	3,65 mm	DIN EN 10255 (DIN 2440) SEAMLESS	P235GH/1.0305/A106	500,4 mm	2/554	
KWS-50-D16A-ROD.118	KWS	PE	D16A	50	MM	3,65 mm	DIN EN 10255 (DIN 2440) SEAMLESS	P235GH/1.0305/A106	2462,4 mm	12/557	
KWS-50-D16A-ROD.118	KWS	PE	D16A	50	MM	3,65 mm	DIN EN 10255 (DIN 2440) SEAMLESS	P235GH/1.0305/A106	913,2 mm	4/660	
KWS-50-D16A-ROD.118	KWS	PE	D16A	50	MM	3,65 mm	DIN EN 10255 (DIN 2440) SEAMLESS	P235GH/1.0305/A106	349,2 mm	1/783	
KWS-50-D16A-ROD.118	KWS	PE	D16A	50	MM	3,65 mm	DIN EN 10255 (DIN 2440) SEAMLESS	P235GH/1.0305/A106	120 mm	0/612	
KWS-50-D16A-ROD.118	KWS	PE	D16A	50	MM	3,65 mm	DIN EN 10255 (DIN 2440) SEAMLESS	P235GH/1.0305/A106	1376,4 mm	7/018	
KWS-50-D16A-ROD.118	KWS	PE	D16A	50	MM	3,65 mm	DIN EN 10255 (DIN 2440) SEAMLESS	P235GH/1.0305/A106	390 mm	1/991	
KWS-50-D16A-ROD.118	KWS	PE	D16A	50	MM	3,65 mm	DIN EN 10255 (DIN 2440) SEAMLESS	P235GH/1.0305/A106	264 mm	1/347	

SUPPORTS WATER

SUPPORT TAG	PIPE TAG	DN	TYPE OF ELEMENT	STD	DESCRIPTION	LENGTH (M)	QUANT.	WEIGHT	PRICE
CWR-200-D16A-ROD.10/SP10-STD10	CWR-200-D16A-ROD.10	200	L150x150x18	STD10	L150x150x18, Cut Length: 750 mm	0/783	1	29/88	
CWR-200-D16A-ROD.10/SP10-STD10	CWR-200-D16A-ROD.10	200	U BOLT	STD10	Lisega Size 402218 Metric U-Bolt		1	1/08	
CWR-200-D16A-ROD.10/SP10-STD10	CWR-200-D16A-ROD.10	200	EXPANSION BOLT (TYPE HILTI HAS/HAS-E rod adhesive anchor M12)	STD10	HILTI DIMENISONS 12 mm dia x 110 mm long cylinder		1	0/00	
CWR-200-D16A-ROD.10/SP10-STD10	CWR-200-D16A-ROD.10	200	EXPANSION BOLT (TYPE HILTI HAS/HAS-E rod adhesive anchor M12)	STD10	HILTI DIMENISONS 12 mm dia x 110 mm long cylinder		1	0/00	
CWR-200-D16A-ROD.10/SP10-STD10	CWR-200-D16A-ROD.10	200	PLATE WITH HOLES (ACCORDING TO SUPPORT STANDARD)	STD10	10 mm Plate Steel, 310 mm x 190 mm		1	4/65	
CWR-200-D16A-ROD.10/SP11-STD10	CWR-200-D16A-ROD.10	200	L150x150x18	STD10	L150x150x18, Cut Length: 750 mm	0/783	1	29/88	
CWR-200-D16A-ROD.10/SP11-STD10	CWR-200-D16A-ROD.10	200	U BOLT	STD10	Lisega Size 402218 Metric U-Bolt		1	1/08	
CWR-200-D16A-ROD.10/SP11-STD10	CWR-200-D16A-ROD.10	200	EXPANSION BOLT (TYPE HILTI HAS/HAS-E rod adhesive anchor M12)	STD10	HILTI DIMENISONS 12 mm dia x 110 mm long cylinder		1	0/00	
CWR-200-D16A-ROD.10/SP11-STD10	CWR-200-D16A-ROD.10	200	EXPANSION BOLT (TYPE HILTI HAS/HAS-E rod adhesive anchor M12)	STD10	HILTI DIMENISONS 12 mm dia x 110 mm long cylinder		1	0/00	
CWR-200-D16A-ROD.10/SP11-STD10	CWR-200-D16A-ROD.10	200	PLATE WITH HOLES (ACCORDING TO SUPPORT STANDARD)	STD10	10 mm Plate Steel, 310 mm x 190 mm		1	4/65	
CWR-200-D16A-ROD.10/SP12-STD10	CWR-200-D16A-ROD.10	200	L150x150x18	STD10	L150x150x18, Cut Length: 750 mm	0/783	1	29/88	
CWR-200-D16A-ROD.10/SP12-STD10	CWR-200-D16A-ROD.10	200	U BOLT	STD10	Lisega Size 402218 Metric U-Bolt		1	1/08	
CWR-200-D16A-ROD.10/SP12-STD10	CWR-200-D16A-ROD.10	200	EXPANSION BOLT (TYPE HILTI HAS/HAS-E rod adhesive anchor M12)	STD10	HILTI DIMENISONS 12 mm dia x 110 mm long cylinder		1	0/00	
CWR-200-D16A-ROD.10/SP12-STD10	CWR-200-D16A-ROD.10	200	EXPANSION BOLT (TYPE HILTI HAS/HAS-E rod adhesive anchor M12)	STD10	HILTI DIMENISONS 12 mm dia x 110 mm long cylinder		1	0/00	
CWR-200-D16A-ROD.10/SP12-STD10	CWR-200-D16A-ROD.10	200	PLATE WITH HOLES (ACCORDING TO SUPPORT STANDARD)	STD10	10 mm Plate Steel, 310 mm x 190 mm		1	4/65	
CWR-200-D16A-ROD.10/SP13-STD10	CWR-200-D16A-ROD.10	200	L150x150x18	STD10	L150x150x18, Cut Length: 750 mm	0/783	1	29/88	
CWR-200-D16A-ROD.10/SP13-STD10	CWR-200-D16A-ROD.10	200	U BOLT	STD10	Lisega Size 402218 Metric U-Bolt		1	1/08	
CWR-200-D16A-ROD.10/SP13-STD10	CWR-200-D16A-ROD.10	200	EXPANSION BOLT (TYPE HILTI HAS/HAS-E rod adhesive anchor M12)	STD10	HILTI DIMENISONS 12 mm dia x 110 mm long cylinder		1	0/00	
CWR-200-D16A-ROD.10/SP13-STD10	CWR-200-D16A-ROD.10	200	EXPANSION BOLT (TYPE HILTI HAS/HAS-E rod adhesive anchor M12)	STD10	HILTI DIMENISONS 12 mm dia x 110 mm long cylinder		1	0/00	
CWR-200-D16A-ROD.10/SP13-STD10	CWR-200-D16A-ROD.10	200	PLATE WITH HOLES (ACCORDING TO SUPPORT STANDARD)	STD10	10 mm Plate Steel, 310 mm x 190 mm		1	4/65	
CWR-200-D16A-ROD.10/SP14-STD10	CWR-200-D16A-ROD.10	200	L150x150x18	STD10	L150x150x18, Cut Length: 750 mm	0/783	1	29/88	
CWR-200-D16A-ROD.10/SP14-STD10	CWR-200-D16A-ROD.10	200	U BOLT	STD10	Lisega Size 402218 Metric U-Bolt		1	1/08	
CWR-200-D16A-ROD.10/SP14-STD10	CWR-200-D16A-ROD.10	200	EXPANSION BOLT (TYPE HILTI HAS/HAS-E rod adhesive anchor M12)	STD10	HILTI DIMENISONS 12 mm dia x 110 mm long cylinder		1	0/00	
CWR-200-D16A-ROD.10/SP14-STD10	CWR-200-D16A-ROD.10	200	EXPANSION BOLT (TYPE HILTI HAS/HAS-E rod adhesive anchor M12)	STD10	HILTI DIMENISONS 12 mm dia x 110 mm long cylinder		1	0/00	
CWR-200-D16A-ROD.10/SP14-STD10	CWR-200-D16A-ROD.10	200	PLATE WITH HOLES (ACCORDING TO SUPPORT STANDARD)	STD10	10 mm Plate Steel, 310 mm x 190 mm		1	4/65	
CWR-200-D16A-ROD.10/SP15-STD10	CWR-200-D16A-ROD.10	200	L150x150x18	STD10	L150x150x18, Cut Length: 750 mm	0/783	1	29/88	
CWR-200-D16A-ROD.10/SP15-STD10	CWR-200-D16A-ROD.10	200	U BOLT	STD10	Lisega Size 402218 Metric U-Bolt		1	1/08	
CWR-200-D16A-ROD.10/SP15-STD10	CWR-200-D16A-ROD.10	200	EXPANSION BOLT (TYPE HILTI HAS/HAS-E rod adhesive anchor M12)	STD10	HILTI DIMENISONS 12 mm dia x 110 mm long cylinder		1	0/00	
CWR-200-D16A-ROD.10/SP15-STD10	CWR-200-D16A-ROD.10	200	EXPANSION BOLT (TYPE HILTI HAS/HAS-E rod adhesive anchor M12)	STD10	HILTI DIMENISONS 12 mm dia x 110 mm long cylinder		1	0/00	
CWR-200-D16A-ROD.10/SP15-STD10	CWR-200-D16A-ROD.10	200	PLATE WITH HOLES (ACCORDING TO SUPPORT STANDARD)	STD10	10 mm Plate Steel, 310 mm x 190 mm		1	4/65	
CWR-200-D16A-ROD.10/SP1-STD10	CWR-200-D16A-ROD.10	200	L150x150x18	STD10	L150x150x18, Cut Length: 750 mm	0/783	1	29/88	
CWR-200-D16A-ROD.10/SP1-STD10	CWR-200-D16A-ROD.10	200	U BOLT	STD10	Lisega Size 402218 Metric U-Bolt		1	1/08	
CWR-200-D16A-ROD.10/SP1-STD10	CWR-200-D16A-ROD.10	200	EXPANSION BOLT (TYPE HILTI HAS/HAS-E rod adhesive anchor M12)	STD10	HILTI DIMENISONS 12 mm dia x 110 mm long cylinder		1	0/00	
CWR-200-D16A-ROD.10/SP1-STD10	CWR-200-D16A-ROD.10	200	EXPANSION BOLT (TYPE HILTI HAS/HAS-E rod adhesive anchor M12)	STD10	HILTI DIMENISONS 12 mm dia x 110 mm long cylinder		1	0/00	
CWR-200-D16A-ROD.10/SP1-STD10	CWR-200-D16A-ROD.10	200	PLATE WITH HOLES (ACCORDING TO SUPPORT STANDARD)	STD10	10 mm Plate Steel, 310 mm x 190 mm		1	4/65	
CWR-200-D16A-ROD.10/SP2-STD11	CWR-200-D16A-ROD.10	200	L150x150x18	STD11	L150x150x18, Cut Length: 810 mm	0/843	1	32/27	
CWR-200-D16A-ROD.10/SP2-STD11	CWR-200-D16A-ROD.10	200	L150x150x18	STD11	L150x150x18, Cut Length: 810 mm	0/843	1	32/27	
CWR-200-D16A-ROD.10/SP2-STD11	CWR-200-D16A-ROD.10	200	U BOLT	STD11	Lisega Size 402218 Metric U-Bolt		1	1/08	
CWR-200-D16A-ROD.10/SP2-STD11	CWR-200-D16A-ROD.10	200	EXPANSION BOLT (TYPE HILTI HAS/HAS-E rod adhesive anchor M12)	STD11	HILTI DIMENISONS 12 mm dia x 110 mm long cylinder		1	0/00	
CWR-200-D16A-ROD.10/SP2-STD11	CWR-200-D16A-ROD.10	200	EXPANSION BOLT (TYPE HILTI HAS/HAS-E rod adhesive anchor M12)	STD11	HILTI DIMENISONS 12 mm dia x 110 mm long cylinder		1	0/00	
CWR-200-D16A-ROD.10/SP2-STD11	CWR-200-D16A-ROD.10	200	EXPANSION BOLT (TYPE HILTI HAS/HAS-E rod adhesive anchor M12)	STD11	HILTI DIMENISONS 12 mm dia x 110 mm long cylinder		1	0/00	
CWR-200-D16A-ROD.10/SP2-STD11	CWR-200-D16A-ROD.10	200	EXPANSION BOLT (TYPE HILTI HAS/HAS-E rod adhesive anchor M12)	STD11	HILTI DIMENISONS 12 mm dia x 110 mm long cylinder		1	0/00	
CWR-200-D16A-ROD.10/SP2-STD11	CWR-200-D16A-ROD.10	200	EXPANSION BOLT (TYPE HILTI HAS/HAS-E rod adhesive anchor M12)	STD11	HILTI DIMENISONS 12 mm dia x 110 mm long cylinder		1	0/00	
CWR-200-D16A-ROD.10/SP2-STD11	CWR-200-D16A-ROD.10	200	PLATE WITH HOLES (ACCORDING TO SUPPORT STANDARD)	STD11	10 mm Plate Steel, 930 mm x 220 mm		1	16/16	
CWR-200-D16A-ROD.10/SP3-STD11	CWR-200-D16A-ROD.10	200	L150x150x18	STD11	L150x150x18, Cut Length: 810 mm	0/843	1	32/27	
CWR-200-D16A-ROD.10/SP3-STD11	CWR-200-D16A-ROD.10	200	L150x150x18	STD11	L150x150x18, Cut Length: 810 mm	0/843	1	32/27	
CWR-200-D16A-ROD.10/SP3-STD11	CWR-200-D16A-ROD.10	200	U BOLT	STD11	Lisega Size 402218 Metric U-Bolt		1	1/08	

CWR-200-D16A-ROD.10/SP3-STD11	CWR-200-D16A-ROD.10	200	EXPANSION BOLT (TYPE HILTI HAS/HAS-E rod adhesive anchor M12)	STD11	HILTI DIMENISONS 12 mm dia x 110 mm long cylinder		1	0/00	
CWR-200-D16A-ROD.10/SP3-STD11	CWR-200-D16A-ROD.10	200	EXPANSION BOLT (TYPE HILTI HAS/HAS-E rod adhesive anchor M12)	STD11	HILTI DIMENISONS 12 mm dia x 110 mm long cylinder		1	0/00	
CWR-200-D16A-ROD.10/SP3-STD11	CWR-200-D16A-ROD.10	200	EXPANSION BOLT (TYPE HILTI HAS/HAS-E rod adhesive anchor M12)	STD11	HILTI DIMENISONS 12 mm dia x 110 mm long cylinder		1	0/00	
CWR-200-D16A-ROD.10/SP3-STD11	CWR-200-D16A-ROD.10	200	EXPANSION BOLT (TYPE HILTI HAS/HAS-E rod adhesive anchor M12)	STD11	HILTI DIMENISONS 12 mm dia x 110 mm long cylinder		1	0/00	
CWR-200-D16A-ROD.10/SP3-STD11	CWR-200-D16A-ROD.10	200	EXPANSION BOLT (TYPE HILTI HAS/HAS-E rod adhesive anchor M12)	STD11	HILTI DIMENISONS 12 mm dia x 110 mm long cylinder		1	0/00	
CWR-200-D16A-ROD.10/SP3-STD11	CWR-200-D16A-ROD.10	200	EXPANSION BOLT (TYPE HILTI HAS/HAS-E rod adhesive anchor M12)	STD11	HILTI DIMENISONS 12 mm dia x 110 mm long cylinder		1	0/00	
CWR-200-D16A-ROD.10/SP3-STD11	CWR-200-D16A-ROD.10	200	PLATE WITH HOLES (ACCORDING TO SUPPORT STANDARD)	STD11	10 mm Plate Steel, 930 mm x 220 mm		1	16/16	
CWR-200-D16A-ROD.10/SP4-STD11	CWR-200-D16A-ROD.10	200	L150x150x18	STD11	L150x150x18, Cut Length: 810 mm	0/843	1	32/27	
CWR-200-D16A-ROD.10/SP4-STD11	CWR-200-D16A-ROD.10	200	L150x150x18	STD11	L150x150x18, Cut Length: 810 mm	0/843	1	32/27	
CWR-200-D16A-ROD.10/SP4-STD11	CWR-200-D16A-ROD.10	200	U BOLT	STD11	Lisega Size 402218 Metric U-Bolt		1	1/08	
CWR-200-D16A-ROD.10/SP4-STD11	CWR-200-D16A-ROD.10	200	EXPANSION BOLT (TYPE HILTI HAS/HAS-E rod adhesive anchor M12)	STD11	HILTI DIMENISONS 12 mm dia x 110 mm long cylinder		1	0/00	

SUPPORT TAG	PIPE TAG	DN	TYPE OF ELEMENT	STD	DESCRIPTION	LENGTH (M)	QUANT.	WEIGHT	PRICE
CWR-200-D16A-ROD.10/SP4-STD11	CWR-200-D16A-ROD.10	200	EXPANSION BOLT (TYPE HILTI HAS/HAS-E rod adhesive anchor M12)	STD11	HILTI DIMENISONS 12 mm dia x 110 mm long cylinder		1	0/00	
CWR-200-D16A-ROD.10/SP4-STD11	CWR-200-D16A-ROD.10	200	EXPANSION BOLT (TYPE HILTI HAS/HAS-E rod adhesive anchor M12)	STD11	HILTI DIMENISONS 12 mm dia x 110 mm long cylinder		1	0/00	
CWR-200-D16A-ROD.10/SP4-STD11	CWR-200-D16A-ROD.10	200	EXPANSION BOLT (TYPE HILTI HAS/HAS-E rod adhesive anchor M12)	STD11	HILTI DIMENISONS 12 mm dia x 110 mm long cylinder		1	0/00	
CWR-200-D16A-ROD.10/SP4-STD11	CWR-200-D16A-ROD.10	200	EXPANSION BOLT (TYPE HILTI HAS/HAS-E rod adhesive anchor M12)	STD11	HILTI DIMENISONS 12 mm dia x 110 mm long cylinder		1	0/00	
CWR-200-D16A-ROD.10/SP4-STD11	CWR-200-D16A-ROD.10	200	EXPANSION BOLT (TYPE HILTI HAS/HAS-E rod adhesive anchor M12)	STD11	HILTI DIMENISONS 12 mm dia x 110 mm long cylinder		1	0/00	
CWR-200-D16A-ROD.10/SP4-STD11	CWR-200-D16A-ROD.10	200	PLATE WITH HOLES (ACCORDING TO SUPPORT STANDARD)	STD11	10 mm Plate Steel, 930 mm x 220 mm		1	16/16	
CWR-200-D16A-ROD.10/SP5-STD10	CWR-200-D16A-ROD.10	200	L150x150x18	STD10	L150x150x18, Cut Length: 750 mm	0/783	1	29/88	
CWR-200-D16A-ROD.10/SP5-STD10	CWR-200-D16A-ROD.10	200	U BOLT	STD10	Lisega Size 402218 Metric U-Bolt		1	1/08	
CWR-200-D16A-ROD.10/SP5-STD10	CWR-200-D16A-ROD.10	200	EXPANSION BOLT (TYPE HILTI HAS/HAS-E rod adhesive anchor M12)	STD10	HILTI DIMENISONS 12 mm dia x 110 mm long cylinder		1	0/00	
CWR-200-D16A-ROD.10/SP5-STD10	CWR-200-D16A-ROD.10	200	EXPANSION BOLT (TYPE HILTI HAS/HAS-E rod adhesive anchor M12)	STD10	HILTI DIMENISONS 12 mm dia x 110 mm long cylinder		1	0/00	
CWR-200-D16A-ROD.10/SP5-STD10	CWR-200-D16A-ROD.10	200	PLATE WITH HOLES (ACCORDING TO SUPPORT STANDARD)	STD10	10 mm Plate Steel, 310 mm x 190 mm		1	4/65	
CWR-200-D16A-ROD.10/SP6-STD11	CWR-200-D16A-ROD.10	200	L150x150x18	STD11	L150x150x18, Cut Length: 810 mm	0/843	1	32/27	
CWR-200-D16A-ROD.10/SP6-STD11	CWR-200-D16A-ROD.10	200	L150x150x18	STD11	L150x150x18, Cut Length: 810 mm	0/843	1	32/27	
CWR-200-D16A-ROD.10/SP6-STD11	CWR-200-D16A-ROD.10	200	U BOLT	STD11	Lisega Size 402218 Metric U-Bolt		1	1/08	
CWR-200-D16A-ROD.10/SP6-STD11	CWR-200-D16A-ROD.10	200	EXPANSION BOLT (TYPE HILTI HAS/HAS-E rod adhesive anchor M12)	STD11	HILTI DIMENISONS 12 mm dia x 110 mm long cylinder		1	0/00	
CWR-200-D16A-ROD.10/SP6-STD11	CWR-200-D16A-ROD.10	200	EXPANSION BOLT (TYPE HILTI HAS/HAS-E rod adhesive anchor M12)	STD11	HILTI DIMENISONS 12 mm dia x 110 mm long cylinder		1	0/00	
CWR-200-D16A-ROD.10/SP6-STD11	CWR-200-D16A-ROD.10	200	EXPANSION BOLT (TYPE HILTI HAS/HAS-E rod adhesive anchor M12)	STD11	HILTI DIMENISONS 12 mm dia x 110 mm long cylinder		1	0/00	
CWR-200-D16A-ROD.10/SP6-STD11	CWR-200-D16A-ROD.10	200	EXPANSION BOLT (TYPE HILTI HAS/HAS-E rod adhesive anchor M12)	STD11	HILTI DIMENISONS 12 mm dia x 110 mm long cylinder		1	0/00	
CWR-200-D16A-ROD.10/SP6-STD11	CWR-200-D16A-ROD.10	200	EXPANSION BOLT (TYPE HILTI HAS/HAS-E rod adhesive anchor M12)	STD11	HILTI DIMENISONS 12 mm dia x 110 mm long cylinder		1	0/00	
CWR-200-D16A-ROD.10/SP6-STD11	CWR-200-D16A-ROD.10	200	PLATE WITH HOLES (ACCORDING TO SUPPORT STANDARD)	STD11	10 mm Plate Steel, 930 mm x 220 mm		1	16/16	
CWR-200-D16A-ROD.10/SP7-STD11	CWR-200-D16A-ROD.10	200	L150x150x18	STD11	L150x150x18, Cut Length: 810 mm	0/843	1	32/27	
CWR-200-D16A-ROD.10/SP7-STD11	CWR-200-D16A-ROD.10	200	L150x150x18	STD11	L150x150x18, Cut Length: 810 mm	0/843	1	32/27	
CWR-200-D16A-ROD.10/SP7-STD11	CWR-200-D16A-ROD.10	200	U BOLT	STD11	Lisega Size 402218 Metric U-Bolt		1	1/08	
CWR-200-D16A-ROD.10/SP7-STD11	CWR-200-D16A-ROD.10	200	EXPANSION BOLT (TYPE HILTI HAS/HAS-E rod adhesive anchor M12)	STD11	HILTI DIMENISONS 12 mm dia x 110 mm long cylinder		1	0/00	
CWR-200-D16A-ROD.10/SP7-STD11	CWR-200-D16A-ROD.10	200	EXPANSION BOLT (TYPE HILTI HAS/HAS-E rod adhesive anchor M12)	STD11	HILTI DIMENISONS 12 mm dia x 110 mm long cylinder		1	0/00	
CWR-200-D16A-ROD.10/SP7-STD11	CWR-200-D16A-ROD.10	200	EXPANSION BOLT (TYPE HILTI HAS/HAS-E rod adhesive anchor M12)	STD11	HILTI DIMENISONS 12 mm dia x 110 mm long cylinder		1	0/00	
CWR-200-D16A-ROD.10/SP7-STD11	CWR-200-D16A-ROD.10	200	EXPANSION BOLT (TYPE HILTI HAS/HAS-E rod adhesive anchor M12)	STD11	HILTI DIMENISONS 12 mm dia x 110 mm long cylinder		1	0/00	
CWR-200-D16A-ROD.10/SP7-STD11	CWR-200-D16A-ROD.10	200	EXPANSION BOLT (TYPE HILTI HAS/HAS-E rod adhesive anchor M12)	STD11	HILTI DIMENISONS 12 mm dia x 110 mm long cylinder		1	0/00	
CWR-200-D16A-ROD.10/SP7-STD11	CWR-200-D16A-ROD.10	200	PLATE WITH HOLES (ACCORDING TO SUPPORT STANDARD)	STD11	10 mm Plate Steel, 930 mm x 220 mm		1	16/16	
CWR-200-D16A-ROD.10/SP8-STD11	CWR-200-D16A-ROD.10	200	L150x150x18	STD11	L150x150x18, Cut Length: 810 mm	0/843	1	32/27	
CWR-200-D16A-ROD.10/SP8-STD11	CWR-200-D16A-ROD.10	200	L150x150x18	STD11	L150x150x18, Cut Length: 810 mm	0/843	1	32/27	
CWR-200-D16A-ROD.10/SP8-STD11	CWR-200-D16A-ROD.10	200	U BOLT	STD11	Lisega Size 402218 Metric U-Bolt		1	1/08	
CWR-200-D16A-ROD.10/SP8-STD11	CWR-200-D16A-ROD.10	200	EXPANSION BOLT (TYPE HILTI HAS/HAS-E rod adhesive anchor M12)	STD11	HILTI DIMENISONS 12 mm dia x 110 mm long cylinder		1	0/00	
CWR-200-D16A-ROD.10/SP8-STD11	CWR-200-D16A-ROD.10	200	EXPANSION BOLT (TYPE HILTI HAS/HAS-E rod adhesive anchor M12)	STD11	HILTI DIMENISONS 12 mm dia x 110 mm long cylinder		1	0/00	
CWR-200-D16A-ROD.10/SP8-STD11	CWR-200-D16A-ROD.10	200	EXPANSION BOLT (TYPE HILTI HAS/HAS-E rod adhesive anchor M12)	STD11	HILTI DIMENISONS 12 mm dia x 110 mm long cylinder		1	0/00	
CWR-200-D16A-ROD.10/SP8-STD11	CWR-200-D16A-ROD.10	200	EXPANSION BOLT (TYPE HILTI HAS/HAS-E rod adhesive anchor M12)	STD11	HILTI DIMENISONS 12 mm dia x 110 mm long cylinder		1	0/00	
CWR-200-D16A-ROD.10/SP8-STD11	CWR-200-D16A-ROD.10	200	EXPANSION BOLT (TYPE HILTI HAS/HAS-E rod adhesive anchor M12)	STD11	HILTI DIMENISONS 12 mm dia x 110 mm long cylinder		1	0/00	
CWR-200-D16A-ROD.10/SP8-STD11	CWR-200-D16A-ROD.10	200	PLATE WITH HOLES (ACCORDING TO SUPPORT STANDARD)	STD11	10 mm Plate Steel, 930 mm x 220 mm		1	16/16	
CWR-200-D16A-ROD.10/SP9-STD10	CWR-200-D16A-ROD.10	200	L150x150x18	STD10	L150x150x18, Cut Length: 750 mm	0/783	1	29/88	
CWR-200-D16A-ROD.10/SP9-STD10	CWR-200-D16A-ROD.10	200	U BOLT	STD10	Lisega Size 402218 Metric U-Bolt		1	1/08	
CWR-200-D16A-ROD.10/SP9-STD10	CWR-200-D16A-ROD.10	200	EXPANSION BOLT (TYPE HILTI HAS/HAS-E rod adhesive anchor M12)	STD10	HILTI DIMENISONS 12 mm dia x 110 mm long cylinder		1	0/00	
CWR-200-D16A-ROD.10/SP9-STD10	CWR-200-D16A-ROD.10	200	EXPANSION BOLT (TYPE HILTI HAS/HAS-E rod adhesive anchor M12)	STD10	HILTI DIMENISONS 12 mm dia x 110 mm long cylinder		1	0/00	
CWR-200-D16A-ROD.10/SP9-STD10	CWR-200-D16A-ROD.10	200	PLATE WITH HOLES (ACCORDING TO SUPPORT STANDARD)	STD10	10 mm Plate Steel, 310 mm x 190 mm		1	4/65	
CWR-20-D16A-ROD.102/SP1-STD134	CWR-20-D16A-ROD.102	20	L70x70x7	STD134	L70x70x7, Cut Length: 259 mm	0/307	1	1/90	
CWR-20-D16A-ROD.102/SP1-STD134	CWR-20-D16A-ROD.102	20	L70x70x7	STD134	L70x70x7, Cut Length: 350 mm	0/398	1	2/56	
CWR-20-D16A-ROD.102/SP1-STD134	CWR-20-D16A-ROD.102	20	U BOLT	STD134	Lisega Size 400218 Metric U-Bolt		1	0/05	
CWR-20-D16A-ROD.102/SP1-STD134	CWR-20-D16A-ROD.102	20	EXPANSION BOLT (TYPE HILTI HAS/HAS-E rod adhesive anchor M12)	STD134	HILTI DIMENISONS 12 mm dia x 110 mm long cylinder		1	0/00	
CWR-20-D16A-ROD.102/SP1-STD134	CWR-20-D16A-ROD.102	20	EXPANSION BOLT (TYPE HILTI HAS/HAS-E rod adhesive anchor M12)	STD134	HILTI DIMENISONS 12 mm dia x 110 mm long cylinder		1	0/00	
CWR-20-D16A-ROD.102/SP1-STD134	CWR-20-D16A-ROD.102	20	PLATE WITH HOLES (ACCORDING TO SUPPORT STANDARD)	STD134	10 mm Plate Steel, 230 mm x 100 mm		1	1/82	
CWR-20-D16A-ROD.103/SP1	CWR-20-D16A-ROD.103	20	U BOLT		Lisega Size 400218 Metric U-Bolt		1	0/05	
CWR-20-D16A-ROD.106/SP1	CWR-20-D16A-ROD.106	20	U BOLT		Lisega Size 400218 Metric U-Bolt		1	0/05	
CWR-20-D16A-ROD.107/SP1	CWR-20-D16A-ROD.107	20	U BOLT		Lisega Size 400318 Metric U-Bolt		1	0/05	
CWR-20-D16A-ROD.114/SP1	CWR-20-D16A-ROD.114	20	U BOLT		Lisega Size 400218 Metric U-Bolt		1	0/05	
CWR-25-D16A-ROD.108/SP1	CWR-25-D16A-ROD.108	25	U BOLT		Lisega Size 400318 Metric U-Bolt		1	0/05	
CWR-25-D16A-ROD.112/SP1	CWR-25-D16A-ROD.112	25	L70x70x7		L70x70x7, Cut Length: 350 mm	0/350	1	2/56	
CWR-25-D16A-ROD.112/SP1	CWR-25-D16A-ROD.112	25	U BOLT		Lisega Size 400318 Metric U-Bolt		1	0/05	

SUPPORT TAG	PIPE TAG	DN	TYPE OF ELEMENT	STD	DESCRIPTION	LENGTH (M)	QUANT.	WEIGHT	PRICE
CWR-25-D16A-ROD.117/SP1	CWR-25-D16A-ROD.117	25	L70x70x7		L70x70x7, Cut Length: 350 mm	0/350	1	2/56	
CWR-25-D16A-ROD.117/SP1	CWR-25-D16A-ROD.117	25	U BOLT		Lisega Size 400318 Metric U-Bolt		1	0/05	
CWR-32-D16A-ROD.104/SP1	CWR-32-D16A-ROD.104	32	U BOLT		Lisega Size 400418 Metric U-Bolt		1	0/15	
CWR-32-D16A-ROD.115/SP1	CWR-32-D16A-ROD.115	32	U BOLT		Lisega Size 400418 Metric U-Bolt		1	0/15	
CWR-32-D16A-ROD.121/SP1	CWR-32-D16A-ROD.121	32	L70x70x7		L70x70x7, Cut Length: 500 mm	0/500	1	3/65	
CWR-32-D16A-ROD.121/SP1	CWR-32-D16A-ROD.121	32	U BOLT		Lisega Size 400418 Metric U-Bolt		1	0/15	
CWR-40-D16A-ROD.123/SP10	CWR-40-D16A-ROD.123	40	U BOLT		Lisega Size 400518 Metric U-Bolt		1	0/16	
CWR-40-D16A-ROD.123/SP2	CWR-40-D16A-ROD.123	40	U BOLT		Lisega Size 400518 Metric U-Bolt		1	0/16	
CWR-40-D16A-ROD.123/SP5	CWR-40-D16A-ROD.123	40	U BOLT		Lisega Size 400518 Metric U-Bolt		1	0/16	
CWR-40-D16A-ROD.123/SP8	CWR-40-D16A-ROD.123	40	U BOLT		Lisega Size 400518 Metric U-Bolt		1	0/16	
CWR-40-D16A-ROD.123/SP9	CWR-40-D16A-ROD.123	40	U BOLT		Lisega Size 400518 Metric U-Bolt		1	0/16	
CWR-65-D16A-ROD.124/SP12	CWR-65-D16A-ROD.124	65	U BOLT		Lisega Size 400718 Metric U-Bolt		1	0/30	
CWR-65-D16A-ROD.124/SP15	CWR-65-D16A-ROD.124	65	U BOLT		Lisega Size 400718 Metric U-Bolt		1	0/30	
CWR-65-D16A-ROD.124/SP18	CWR-65-D16A-ROD.124	65	U BOLT		Lisega Size 400718 Metric U-Bolt		1	0/30	
CWR-65-D16A-ROD.124/SP2	CWR-65-D16A-ROD.124	65	U BOLT		Lisega Size 400718 Metric U-Bolt		1	0/30	
CWR-65-D16A-ROD.124/SP20	CWR-65-D16A-ROD.124	65	U BOLT		Lisega Size 400718 Metric U-Bolt		1	0/30	
CWR-65-D16A-ROD.124/SP21	CWR-65-D16A-ROD.124	65	U BOLT		Lisega Size 400718 Metric U-Bolt		1	0/30	
CWR-65-D16A-ROD.124/SP22	CWR-65-D16A-ROD.124	65	U BOLT		Lisega Size 400718 Metric U-Bolt		1	0/30	
CWR-65-D16A-ROD.124/SP24	CWR-65-D16A-ROD.124	65	U BOLT		Lisega Size 400718 Metric U-Bolt		1	0/30	
CWR-65-D16A-ROD.124/SP27	CWR-65-D16A-ROD.124	65	U BOLT		Lisega Size 400718 Metric U-Bolt		1	0/30	
CWR-65-D16A-ROD.124/SP28	CWR-65-D16A-ROD.124	65	U BOLT		Lisega Size 400718 Metric U-Bolt		1	0/30	
CWR-65-D16A-ROD.124/SP3	CWR-65-D16A-ROD.124	65	U BOLT		Lisega Size 400718 Metric U-Bolt		1	0/30	
CWR-65-D16A-ROD.124/SP6	CWR-65-D16A-ROD.124	65	U BOLT		Lisega Size 400718 Metric U-Bolt		1	0/30	
CWR-65-D16A-ROD.124/SP9	CWR-65-D16A-ROD.124	65	U BOLT		Lisega Size 400718 Metric U-Bolt		1	0/30	
CWR-80-D16A-ROD.105/SP1	CWR-80-D16A-ROD.105	80	L70x70x7		L70x70x7, Cut Length: 250 mm	0/298	1	1/83	
CWR-80-D16A-ROD.105/SP1	CWR-80-D16A-ROD.105	80	U BOLT		Lisega Size 400918 Metric U-Bolt		1	0/32	
CWR-80-D16A-ROD.105/SP2	CWR-80-D16A-ROD.105	80	L70x70x7		L70x70x7, Cut Length: 250 mm	0/298	1	1/83	
CWR-80-D16A-ROD.105/SP2	CWR-80-D16A-ROD.105	80	U BOLT		Lisega Size 400918 Metric U-Bolt		1	0/32	
CWS-200-D16A-ROD.10/SP1	CWS-200-D16A-ROD.10	200	U BOLT		Lisega Size 402218 Metric U-Bolt		1	1/08	
CWS-200-D16A-ROD.10/SP10	CWS-200-D16A-ROD.10	200	U BOLT		Lisega Size 402218 Metric U-Bolt		1	1/08	
CWS-200-D16A-ROD.10/SP11	CWS-200-D16A-ROD.10	200	U BOLT		Lisega Size 402218 Metric U-Bolt		1	1/08	
CWS-200-D16A-ROD.10/SP12	CWS-200-D16A-ROD.10	200	U BOLT		Lisega Size 402218 Metric U-Bolt		1	1/08	
CWS-200-D16A-ROD.10/SP13	CWS-200-D16A-ROD.10	200	U BOLT		Lisega Size 402218 Metric U-Bolt		1	1/08	
CWS-200-D16A-ROD.10/SP14	CWS-200-D16A-ROD.10	200	U BOLT		Lisega Size 402218 Metric U-Bolt		1	1/08	
CWS-200-D16A-ROD.10/SP15	CWS-200-D16A-ROD.10	200	U BOLT		Lisega Size 402218 Metric U-Bolt		1	1/08	
CWS-200-D16A-ROD.10/SP2	CWS-200-D16A-ROD.10	200	U BOLT		Lisega Size 402218 Metric U-Bolt		1	1/08	
CWS-200-D16A-ROD.10/SP3	CWS-200-D16A-ROD.10	200	U BOLT		Lisega Size 402218 Metric U-Bolt		1	1/08	
CWS-200-D16A-ROD.10/SP4	CWS-200-D16A-ROD.10	200	U BOLT		Lisega Size 402218 Metric U-Bolt		1	1/08	
CWS-200-D16A-ROD.10/SP5	CWS-200-D16A-ROD.10	200	U BOLT		Lisega Size 402218 Metric U-Bolt		1	1/08	
CWS-200-D16A-ROD.10/SP6	CWS-200-D16A-ROD.10	200	U BOLT		Lisega Size 402218 Metric U-Bolt		1	1/08	
CWS-200-D16A-ROD.10/SP7	CWS-200-D16A-ROD.10	200	U BOLT		Lisega Size 402218 Metric U-Bolt		1	1/08	
CWS-200-D16A-ROD.10/SP8	CWS-200-D16A-ROD.10	200	U BOLT		Lisega Size 402218 Metric U-Bolt		1	1/08	
CWS-200-D16A-ROD.10/SP9	CWS-200-D16A-ROD.10	200	U BOLT		Lisega Size 402218 Metric U-Bolt		1	1/08	
CWS-20-D16A-ROD.106/SP1	CWS-20-D16A-ROD.106	20	U BOLT		Lisega Size 400218 Metric U-Bolt		1	0/05	
CWS-25-D16A-ROD.108/SP1	CWS-25-D16A-ROD.108	25	U BOLT		Lisega Size 400318 Metric U-Bolt		1	0/05	
CWS-25-D16A-ROD.108/SP2-STD135	CWS-25-D16A-ROD.108	25	L70x70x7	STD135	L70x70x7, Cut Length: 140 mm	0/140	1	1/02	
CWS-25-D16A-ROD.108/SP2-STD135	CWS-25-D16A-ROD.108	25	U BOLT	STD135	Lisega Size 400318 Metric U-Bolt		1	0/05	
CWS-25-D16A-ROD.108/SP2-STD135	CWS-25-D16A-ROD.108	25	EXPANSION BOLT (TYPE HILTI HAS/HAS-E rod adhesive anchor M12)	STD135	HILTI DIMENISONS 12 mm dia x 110 mm long cylinder		1	0/00	
CWS-25-D16A-ROD.108/SP2-STD135	CWS-25-D16A-ROD.108	25	EXPANSION BOLT (TYPE HILTI HAS/HAS-E rod adhesive anchor M12)	STD135	HILTI DIMENISONS 12 mm dia x 110 mm long cylinder		1	0/00	
CWS-25-D16A-ROD.108/SP2-STD135	CWS-25-D16A-ROD.108	25	PLATE WITH HOLES (ACCORDING TO SUPPORT STANDARD)	STD135	10 mm Plate Steel, 230 mm x 100 mm		1	1/82	
CWS-25-D16A-ROD.108/SP3	CWS-25-D16A-ROD.108	25	L70x70x7		L70x70x7, Cut Length: 250 mm	0/250	1	1/83	
CWS-25-D16A-ROD.108/SP3	CWS-25-D16A-ROD.108	25	U BOLT		Lisega Size 400318 Metric U-Bolt		1	0/05	
CWS-25-D16A-ROD.112/SP1	CWS-25-D16A-ROD.112	25	L70x70x7		L70x70x7, Cut Length: 350 mm	0/350	1	2/56	
CWS-25-D16A-ROD.112/SP1	CWS-25-D16A-ROD.112	25	U BOLT		Lisega Size 400318 Metric U-Bolt		1	0/05	
CWS-25-D16A-ROD.117/SP1	CWS-25-D16A-ROD.117	25	L70x70x7		L70x70x7, Cut Length: 350 mm	0/350	1	2/56	
CWS-25-D16A-ROD.117/SP1	CWS-25-D16A-ROD.117	25	U BOLT		Lisega Size 400318 Metric U-Bolt		1	0/05	
CWS-32-D16A-ROD.104/SP1	CWS-32-D16A-ROD.104	32	L70x70x7		L70x70x7, Cut Length: 680 mm	0/728	1	4/97	
CWS-32-D16A-ROD.104/SP1	CWS-32-D16A-ROD.104	32	U BOLT		Lisega Size 400418 Metric U-Bolt		1	0/15	
CWS-32-D16A-ROD.111/SP1-STD136	CWS-32-D16A-ROD.111	32	L70x70x7	STD136	L70x70x7, Cut Length: 510 mm	0/558	1	3/73	

SUPPORT TAG	PIPE TAG	DN	TYPE OF ELEMENT	STD	DESCRIPTION	LENGTH (M)	QUANT.	WEIGHT	PRICE
CWS-32-D16A-ROD.111/SP1-STD136	CWS-32-D16A-ROD.111	32	L70x70x7	STD136	L70x70x7, Cut Length: 480 mm	0/528	1	3/51	
CWS-32-D16A-ROD.111/SP1-STD136	CWS-32-D16A-ROD.111	32	U BOLT	STD136	Lisega Size 400418 Metric U-Bolt		1	0/15	
CWS-32-D16A-ROD.111/SP1-STD136	CWS-32-D16A-ROD.111	32	EXPANSION BOLT (TYPE HILTI HAS/HAS-E rod adhesive anchor M12)	STD136	HILTI DIMENISONS 12 mm dia x 110 mm long cylinder		1	0/00	
CWS-32-D16A-ROD.111/SP1-STD136	CWS-32-D16A-ROD.111	32	EXPANSION BOLT (TYPE HILTI HAS/HAS-E rod adhesive anchor M12)	STD136	HILTI DIMENISONS 12 mm dia x 110 mm long cylinder		1	0/00	
CWS-32-D16A-ROD.111/SP1-STD136	CWS-32-D16A-ROD.111	32	PLATE WITH HOLES (ACCORDING TO SUPPORT STANDARD)	STD136	10 mm Plate Steel, 230 mm x 100 mm		1	1/82	
CWS-32-D16A-ROD.121/SP1	CWS-32-D16A-ROD.121	32	U BOLT		Lisega Size 400418 Metric U-Bolt		1	0/15	
CWS-40-D16A-ROD.101/SP1	CWS-40-D16A-ROD.101	40	U BOLT		Lisega Size 400518 Metric U-Bolt		1	0/16	
CWS-40-D16A-ROD.123/SP1	CWS-40-D16A-ROD.123	40	UPN100		UPN100, Cut Length: 350 mm	0/350	1	3/70	
CWS-40-D16A-ROD.123/SP10-STD1	CWS-40-D16A-ROD.123	40	L70x70x7	STD1	L70x70x7, Cut Length: 360 mm	0/360	1	2/63	
CWS-40-D16A-ROD.123/SP10-STD1	CWS-40-D16A-ROD.123	40	U BOLT	STD1	Lisega Size 400518 Metric U-Bolt		1	0/16	
CWS-40-D16A-ROD.123/SP10-STD1	CWS-40-D16A-ROD.123	40	EXPANSION BOLT (TYPE HILTI HAS/HAS-E rod adhesive anchor M12)	STD1	HILTI DIMENISONS 12 mm dia x 110 mm long cylinder		1	0/00	
CWS-40-D16A-ROD.123/SP10-STD1	CWS-40-D16A-ROD.123	40	EXPANSION BOLT (TYPE HILTI HAS/HAS-E rod adhesive anchor M12)	STD1	HILTI DIMENISONS 12 mm dia x 110 mm long cylinder		1	0/00	
CWS-40-D16A-ROD.123/SP10-STD1	CWS-40-D16A-ROD.123	40	PLATE WITH HOLES (ACCORDING TO SUPPORT STANDARD)	STD1	10 mm Plate Steel, 230 mm x 100 mm		1	1/82	
CWS-40-D16A-ROD.123/SP2	CWS-40-D16A-ROD.123	40	U BOLT		Lisega Size 400518 Metric U-Bolt		1	0/16	
CWS-40-D16A-ROD.123/SP2	CWS-40-D16A-ROD.123	40	UPN100		UPN100, Cut Length: 350 mm	0/350	1	3/70	
CWS-40-D16A-ROD.123/SP3	CWS-40-D16A-ROD.123	40	UPN100		UPN100, Cut Length: 350 mm	0/350	1	3/70	
CWS-40-D16A-ROD.123/SP4	CWS-40-D16A-ROD.123	40	UPN100		UPN100, Cut Length: 350 mm	0/350	1	3/70	
CWS-40-D16A-ROD.123/SP5	CWS-40-D16A-ROD.123	40	U BOLT		Lisega Size 400518 Metric U-Bolt		1	0/16	
CWS-40-D16A-ROD.123/SP5	CWS-40-D16A-ROD.123	40	UPN100		UPN100, Cut Length: 350 mm	0/350	1	3/70	
CWS-40-D16A-ROD.123/SP6	CWS-40-D16A-ROD.123	40	UPN100		UPN100, Cut Length: 350 mm	0/350	1	3/70	
CWS-40-D16A-ROD.123/SP7	CWS-40-D16A-ROD.123	40	UPN100		UPN100, Cut Length: 350 mm	0/350	1	3/70	
CWS-40-D16A-ROD.123/SP8	CWS-40-D16A-ROD.123	40	U BOLT		Lisega Size 400518 Metric U-Bolt		1	0/16	
CWS-40-D16A-ROD.123/SP8	CWS-40-D16A-ROD.123	40	UPN100		UPN100, Cut Length: 350 mm	0/350	1	3/70	
CWS-40-D16A-ROD.123/SP9-STD1	CWS-40-D16A-ROD.123	40	L70x70x7	STD1	L70x70x7, Cut Length: 360 mm	0/360	1	2/63	
CWS-40-D16A-ROD.123/SP9-STD1	CWS-40-D16A-ROD.123	40	U BOLT	STD1	Lisega Size 400518 Metric U-Bolt		1	0/16	
CWS-40-D16A-ROD.123/SP9-STD1	CWS-40-D16A-ROD.123	40	EXPANSION BOLT (TYPE HILTI HAS/HAS-E rod adhesive anchor M12)	STD1	HILTI DIMENISONS 12 mm dia x 110 mm long cylinder		1	0/00	
CWS-40-D16A-ROD.123/SP9-STD1	CWS-40-D16A-ROD.123	40	EXPANSION BOLT (TYPE HILTI HAS/HAS-E rod adhesive anchor M12)	STD1	HILTI DIMENISONS 12 mm dia x 110 mm long cylinder		1	0/00	
CWS-40-D16A-ROD.123/SP9-STD1	CWS-40-D16A-ROD.123	40	PLATE WITH HOLES (ACCORDING TO SUPPORT STANDARD)	STD1	10 mm Plate Steel, 230 mm x 100 mm		1	1/82	
CWS-65-D16A-ROD.124/SP1	CWS-65-D16A-ROD.124	65	L70x70x7		L70x70x7, Cut Length: 500 mm	0/548	1	3/65	
CWS-65-D16A-ROD.124/SP10	CWS-65-D16A-ROD.124	65	L70x70x7		L70x70x7, Cut Length: 500 mm	0/548	1	3/65	
CWS-65-D16A-ROD.124/SP11	CWS-65-D16A-ROD.124	65	L70x70x7		L70x70x7, Cut Length: 500 mm	0/548	1	3/65	
CWS-65-D16A-ROD.124/SP12	CWS-65-D16A-ROD.124	65	L70x70x7		L70x70x7, Cut Length: 500 mm	0/548	1	3/65	
CWS-65-D16A-ROD.124/SP12	CWS-65-D16A-ROD.124	65	U BOLT		Lisega Size 400718 Metric U-Bolt		1	0/30	
CWS-65-D16A-ROD.124/SP13	CWS-65-D16A-ROD.124	65	L70x70x7		L70x70x7, Cut Length: 500 mm	0/548	1	3/65	
CWS-65-D16A-ROD.124/SP14	CWS-65-D16A-ROD.124	65	L70x70x7		L70x70x7, Cut Length: 500 mm	0/548	1	3/65	
CWS-65-D16A-ROD.124/SP15	CWS-65-D16A-ROD.124	65	L70x70x7		L70x70x7, Cut Length: 500 mm	0/548	1	3/65	
CWS-65-D16A-ROD.124/SP15	CWS-65-D16A-ROD.124	65	U BOLT		Lisega Size 400718 Metric U-Bolt		1	0/30	
CWS-65-D16A-ROD.124/SP16	CWS-65-D16A-ROD.124	65	L70x70x7		L70x70x7, Cut Length: 500 mm	0/548	1	3/65	
CWS-65-D16A-ROD.124/SP17	CWS-65-D16A-ROD.124	65	L70x70x7		L70x70x7, Cut Length: 500 mm	0/548	1	3/65	
CWS-65-D16A-ROD.124/SP18	CWS-65-D16A-ROD.124	65	L70x70x7		L70x70x7, Cut Length: 400 mm	0/448	1	2/92	
CWS-65-D16A-ROD.124/SP18	CWS-65-D16A-ROD.124	65	U BOLT		Lisega Size 400718 Metric U-Bolt		1	0/30	
CWS-65-D16A-ROD.124/SP19	CWS-65-D16A-ROD.124	65	L70x70x7		L70x70x7, Cut Length: 500 mm	0/548	1	3/65	
CWS-65-D16A-ROD.124/SP2	CWS-65-D16A-ROD.124	65	L70x70x7		L70x70x7, Cut Length: 500 mm	0/548	1	3/65	
CWS-65-D16A-ROD.124/SP2	CWS-65-D16A-ROD.124	65	U BOLT		Lisega Size 400718 Metric U-Bolt		1	0/30	
CWS-65-D16A-ROD.124/SP20	CWS-65-D16A-ROD.124	65	L70x70x7		L70x70x7, Cut Length: 400 mm	0/448	1	2/92	
CWS-65-D16A-ROD.124/SP20	CWS-65-D16A-ROD.124	65	U BOLT		Lisega Size 400718 Metric U-Bolt		1	0/30	
CWS-65-D16A-ROD.124/SP21	CWS-65-D16A-ROD.124	65	L70x70x7		L70x70x7, Cut Length: 400 mm	0/448	1	2/92	
CWS-65-D16A-ROD.124/SP21	CWS-65-D16A-ROD.124	65	U BOLT		Lisega Size 400718 Metric U-Bolt		1	0/30	
CWS-65-D16A-ROD.124/SP22	CWS-65-D16A-ROD.124	65	U BOLT		Lisega Size 400718 Metric U-Bolt		1	0/30	
CWS-65-D16A-ROD.124/SP22	CWS-65-D16A-ROD.124	65	UPN100		UPN100, Cut Length: 350 mm	0/350	1	3/70	
CWS-65-D16A-ROD.124/SP23	CWS-65-D16A-ROD.124	65	UPN100		UPN100, Cut Length: 350 mm	0/350	1	3/70	
CWS-65-D16A-ROD.124/SP24	CWS-65-D16A-ROD.124	65	U BOLT		Lisega Size 400718 Metric U-Bolt		1	0/30	
CWS-65-D16A-ROD.124/SP24	CWS-65-D16A-ROD.124	65	UPN100		UPN100, Cut Length: 350 mm	0/350	1	3/70	
CWS-65-D16A-ROD.124/SP25	CWS-65-D16A-ROD.124	65	UPN100		UPN100, Cut Length: 350 mm	0/350	1	3/70	
CWS-65-D16A-ROD.124/SP26	CWS-65-D16A-ROD.124	65	UPN100		UPN100, Cut Length: 350 mm	0/350	1	3/70	
CWS-65-D16A-ROD.124/SP27	CWS-65-D16A-ROD.124	65	U BOLT		Lisega Size 400718 Metric U-Bolt		1	0/30	
CWS-65-D16A-ROD.124/SP27	CWS-65-D16A-ROD.124	65	UPN100		UPN100, Cut Length: 350 mm	0/350	1	3/70	
CWS-65-D16A-ROD.124/SP28	CWS-65-D16A-ROD.124	65	U BOLT		Lisega Size 400718 Metric U-Bolt		1	0/30	
CWS-65-D16A-ROD.124/SP28	CWS-65-D16A-ROD.124	65	UPN100		UPN100, Cut Length: 350 mm	0/350	1	3/70	

SUPPORT TAG	PIPE TAG	DN	TYPE OF ELEMENT	STD	DESCRIPTION	LENGTH (M)	QUANT.	WEIGHT	PRICE
CWS-65-D16A-ROD.124/SP3	CWS-65-D16A-ROD.124	65	L70x70x7		L70x70x7, Cut Length: 500 mm	0/548	1	3/65	
CWS-65-D16A-ROD.124/SP3	CWS-65-D16A-ROD.124	65	U BOLT		Lisega Size 400718 Metric U-Bolt		1	0/30	
CWS-65-D16A-ROD.124/SP4	CWS-65-D16A-ROD.124	65	L70x70x7		L70x70x7, Cut Length: 500 mm	0/548	1	3/65	
CWS-65-D16A-ROD.124/SP5	CWS-65-D16A-ROD.124	65	L70x70x7		L70x70x7, Cut Length: 500 mm	0/548	1	3/65	
CWS-65-D16A-ROD.124/SP6	CWS-65-D16A-ROD.124	65	L70x70x7		L70x70x7, Cut Length: 500 mm	0/548	1	3/65	
CWS-65-D16A-ROD.124/SP6	CWS-65-D16A-ROD.124	65	U BOLT		Lisega Size 400718 Metric U-Bolt		1	0/30	
CWS-65-D16A-ROD.124/SP7	CWS-65-D16A-ROD.124	65	L70x70x7		L70x70x7, Cut Length: 500 mm	0/548	1	3/65	
CWS-65-D16A-ROD.124/SP8	CWS-65-D16A-ROD.124	65	L70x70x7		L70x70x7, Cut Length: 500 mm	0/548	1	3/65	
CWS-65-D16A-ROD.124/SP9	CWS-65-D16A-ROD.124	65	L70x70x7		L70x70x7, Cut Length: 500 mm	0/548	1	3/65	
CWS-65-D16A-ROD.124/SP9	CWS-65-D16A-ROD.124	65	U BOLT		Lisega Size 400718 Metric U-Bolt		1	0/30	
CWS-80-D16A-ROD.105/SP1	CWS-80-D16A-ROD.105	80	L70x70x7		L70x70x7, Cut Length: 250 mm	0/298	1	1/83	
CWS-80-D16A-ROD.105/SP1	CWS-80-D16A-ROD.105	80	U BOLT		Lisega Size 400918 Metric U-Bolt		1	0/32	
CWS-80-D16A-ROD.105/SP2	CWS-80-D16A-ROD.105	80	L70x70x7		L70x70x7, Cut Length: 250 mm	0/298	1	1/83	
CWS-80-D16A-ROD.105/SP2	CWS-80-D16A-ROD.105	80	U BOLT		Lisega Size 400918 Metric U-Bolt		1	0/32	
KWR-300-D16A-ROD.103/SP1-STD117	KWR-300-D16A-ROD.103	300	L150x150x18	STD117	L150x150x18, Cut Length: 914 mm	0/914	1	36/40	
KWR-300-D16A-ROD.103/SP1-STD117	KWR-300-D16A-ROD.103	300	L150x150x18	STD117	L150x150x18, Cut Length: 450 mm	0/450	1	17/93	
KWR-300-D16A-ROD.103/SP1-STD117	KWR-300-D16A-ROD.103	300	U BOLT	STD117	Lisega Size 403218 Metric U-Bolt		1	2/35	
KWR-300-D16A-ROD.103/SP1-STD117	KWR-300-D16A-ROD.103	300	EXPANSION BOLT (TYPE HILTI HAS/HAS-E rod adhesive anchor M12)	STD117	HILTI DIMENISONS 12 mm dia x 110 mm long cylinder		1	0/00	
KWR-300-D16A-ROD.103/SP1-STD117	KWR-300-D16A-ROD.103	300	EXPANSION BOLT (TYPE HILTI HAS/HAS-E rod adhesive anchor M12)	STD117	HILTI DIMENISONS 12 mm dia x 110 mm long cylinder		1	0/00	
KWR-300-D16A-ROD.103/SP1-STD117	KWR-300-D16A-ROD.103	300	PLATE WITH HOLES (ACCORDING TO SUPPORT STANDARD)	STD117	10 mm Plate Steel, 310 mm x 190 mm		1	4/65	
KWR-300-D16A-ROD.119/SP1-STD109	KWR-300-D16A-ROD.119	300	L150x150x18	STD109	L150x150x18, Cut Length: 450 mm	0/450	1	17/93	
KWR-300-D16A-ROD.119/SP1-STD109	KWR-300-D16A-ROD.119	300	L150x150x18	STD109	L150x150x18, Cut Length: 690 mm	0/690	1	27/49	
KWR-300-D16A-ROD.119/SP1-STD109	KWR-300-D16A-ROD.119	300	U BOLT	STD109	Lisega Size 403218 Metric U-Bolt		1	2/35	
KWR-300-D16A-ROD.119/SP1-STD109	KWR-300-D16A-ROD.119	300	EXPANSION BOLT (TYPE HILTI HAS/HAS-E rod adhesive anchor M12)	STD109	HILTI DIMENISONS 12 mm dia x 110 mm long cylinder		1	0/00	
KWR-300-D16A-ROD.119/SP1-STD109	KWR-300-D16A-ROD.119	300	EXPANSION BOLT (TYPE HILTI HAS/HAS-E rod adhesive anchor M12)	STD109	HILTI DIMENISONS 12 mm dia x 110 mm long cylinder		1	0/00	
KWR-300-D16A-ROD.119/SP1-STD109	KWR-300-D16A-ROD.119	300	PLATE WITH HOLES (ACCORDING TO SUPPORT STANDARD)	STD109	10 mm Plate Steel, 310 mm x 190 mm		1	4/65	
KWR-300-D16A-ROD.119/SP2-STD110	KWR-300-D16A-ROD.119	300	HEB160	STD110	HEB160, Cut Length: 650 mm	2/175	1	26/69	
KWR-300-D16A-ROD.119/SP2-STD110	KWR-300-D16A-ROD.119	300	U BOLT	STD110	Lisega Size 403218 Metric U-Bolt		1	2/35	
KWR-300-D16A-ROD.120/SP1-STD112	KWR-300-D16A-ROD.120	300	L150x150x18	STD112	L150x150x18, Cut Length: 1250 mm	1/150	1	49/80	
KWR-300-D16A-ROD.120/SP1-STD112	KWR-300-D16A-ROD.120	300	U BOLT	STD112	Lisega Size 403218 Metric U-Bolt		1	2/35	
KWR-300-D16A-ROD.120/SP1-STD112	KWR-300-D16A-ROD.120	300	EXPANSION BOLT (TYPE HILTI HAS/HAS-E rod adhesive anchor M12)	STD112	HILTI DIMENISONS 12 mm dia x 110 mm long cylinder		1	0/00	
KWR-300-D16A-ROD.120/SP1-STD112	KWR-300-D16A-ROD.120	300	EXPANSION BOLT (TYPE HILTI HAS/HAS-E rod adhesive anchor M12)	STD112	HILTI DIMENISONS 12 mm dia x 110 mm long cylinder		1	0/00	
KWR-300-D16A-ROD.120/SP1-STD112	KWR-300-D16A-ROD.120	300	PLATE WITH HOLES (ACCORDING TO SUPPORT STANDARD)	STD112	10 mm Plate Steel, 310 mm x 190 mm		1	4/65	
KWR-300-D16A-ROD.120/SP2-STD130	KWR-300-D16A-ROD.120	300	L150x150x18	STD130	L150x150x18, Cut Length: 600 mm	0/600	1	23/91	
KWR-300-D16A-ROD.120/SP2-STD130	KWR-300-D16A-ROD.120	300	U BOLT	STD130	Lisega Size 403218 Metric U-Bolt		1	2/35	
KWR-300-D16A-ROD.120/SP2-STD130	KWR-300-D16A-ROD.120	300	EXPANSION BOLT (TYPE HILTI HAS/HAS-E rod adhesive anchor M12)	STD130	HILTI DIMENISONS 12 mm dia x 110 mm long cylinder		1	0/00	
KWR-300-D16A-ROD.120/SP2-STD130	KWR-300-D16A-ROD.120	300	EXPANSION BOLT (TYPE HILTI HAS/HAS-E rod adhesive anchor M12)	STD130	HILTI DIMENISONS 12 mm dia x 110 mm long cylinder		1	0/00	
KWR-300-D16A-ROD.120/SP2-STD130	KWR-300-D16A-ROD.120	300	PLATE WITH HOLES (ACCORDING TO SUPPORT STANDARD)	STD130	10 mm Plate Steel, 310 mm x 190 mm		1	4/65	
KWR-300-D16A-ROD.120/SP3-STD130	KWR-300-D16A-ROD.120	300	L150x150x18	STD130	L150x150x18, Cut Length: 600 mm	0/600	1	23/91	
KWR-300-D16A-ROD.120/SP3-STD130	KWR-300-D16A-ROD.120	300	U BOLT	STD130	Lisega Size 403218 Metric U-Bolt		1	2/35	
KWR-300-D16A-ROD.120/SP3-STD130	KWR-300-D16A-ROD.120	300	EXPANSION BOLT (TYPE HILTI HAS/HAS-E rod adhesive anchor M12)	STD130	HILTI DIMENISONS 12 mm dia x 110 mm long cylinder		1	0/00	
KWR-300-D16A-ROD.120/SP3-STD130	KWR-300-D16A-ROD.120	300	EXPANSION BOLT (TYPE HILTI HAS/HAS-E rod adhesive anchor M12)	STD130	HILTI DIMENISONS 12 mm dia x 110 mm long cylinder		1	0/00	
KWR-300-D16A-ROD.120/SP3-STD130	KWR-300-D16A-ROD.120	300	PLATE WITH HOLES (ACCORDING TO SUPPORT STANDARD)	STD130	10 mm Plate Steel, 310 mm x 190 mm		1	4/65	
KWR-300-D16A-ROD.120/SP4-STD130	KWR-300-D16A-ROD.120	300	L150x150x18	STD130	L150x150x18, Cut Length: 600 mm	0/600	1	23/91	
KWR-300-D16A-ROD.120/SP4-STD130	KWR-300-D16A-ROD.120	300	U BOLT	STD130	Lisega Size 403218 Metric U-Bolt		1	2/35	
KWR-300-D16A-ROD.120/SP4-STD130	KWR-300-D16A-ROD.120	300	EXPANSION BOLT (TYPE HILTI HAS/HAS-E rod adhesive anchor M12)	STD130	HILTI DIMENISONS 12 mm dia x 110 mm long cylinder		1	0/00	
KWR-300-D16A-ROD.120/SP4-STD130	KWR-300-D16A-ROD.120	300	EXPANSION BOLT (TYPE HILTI HAS/HAS-E rod adhesive anchor M12)	STD130	HILTI DIMENISONS 12 mm dia x 110 mm long cylinder		1	0/00	
KWR-300-D16A-ROD.120/SP4-STD130	KWR-300-D16A-ROD.120	300	PLATE WITH HOLES (ACCORDING TO SUPPORT STANDARD)	STD130	10 mm Plate Steel, 310 mm x 190 mm		1	4/65	
KWR-300-D16A-ROD.120/SP5-STD130	KWR-300-D16A-ROD.120	300	L150x150x18	STD130	L150x150x18, Cut Length: 600 mm	0/600	1	23/91	
KWR-300-D16A-ROD.120/SP5-STD130	KWR-300-D16A-ROD.120	300	U BOLT	STD130	Lisega Size 403218 Metric U-Bolt		1	2/35	
KWR-300-D16A-ROD.120/SP5-STD130	KWR-300-D16A-ROD.120	300	EXPANSION BOLT (TYPE HILTI HAS/HAS-E rod adhesive anchor M12)	STD130	HILTI DIMENISONS 12 mm dia x 110 mm long cylinder		1	0/00	
KWR-300-D16A-ROD.120/SP5-STD130	KWR-300-D16A-ROD.120	300	EXPANSION BOLT (TYPE HILTI HAS/HAS-E rod adhesive anchor M12)	STD130	HILTI DIMENISONS 12 mm dia x 110 mm long cylinder		1	0/00	
KWR-300-D16A-ROD.120/SP5-STD130	KWR-300-D16A-ROD.120	300	PLATE WITH HOLES (ACCORDING TO SUPPORT STANDARD)	STD130	10 mm Plate Steel, 310 mm x 190 mm		1	4/65	
KWR-300-D16A-ROD.95/SP1-STD114	KWR-300-D16A-ROD.95	300	L150x150x18	STD114	L150x150x18, Cut Length: 450 mm	0/450	1	17/93	
KWR-300-D16A-ROD.95/SP1-STD114	KWR-300-D16A-ROD.95	300	L150x150x18	STD114	L150x150x18, Cut Length: 859 mm	0/859	1	34/21	
KWR-300-D16A-ROD.95/SP1-STD114	KWR-300-D16A-ROD.95	300	U BOLT	STD114	Lisega Size 403218 Metric U-Bolt		1	2/35	
KWR-300-D16A-ROD.95/SP1-STD114	KWR-300-D16A-ROD.95	300	EXPANSION BOLT (TYPE HILTI HAS/HAS-E rod adhesive anchor M12)	STD114	HILTI DIMENISONS 12 mm dia x 110 mm long cylinder		1	0/00	
KWR-300-D16A-ROD.95/SP1-STD114	KWR-300-D16A-ROD.95	300	EXPANSION BOLT (TYPE HILTI HAS/HAS-E rod adhesive anchor M12)	STD114	HILTI DIMENISONS 12 mm dia x 110 mm long cylinder		1	0/00	
KWR-300-D16A-ROD.95/SP1-STD114	KWR-300-D16A-ROD.95	300	PLATE WITH HOLES (ACCORDING TO SUPPORT STANDARD)	STD114	10 mm Plate Steel, 310 mm x 190 mm		1	4/65	

SUPPORT TAG	PIPE TAG	DN	TYPE OF ELEMENT	STD	DESCRIPTION	LENGTH (M)	QUANT.	WEIGHT	PRICE
KWR-400-D16A-ROD.121/SP10-STD126	KWR-400-D16A-ROD.121	400	CYLINDER OF CARBON STEEL	STD126	CYLINDER D: 20, L: 200 mm		1	0/00	
KWR-400-D16A-ROD.121/SP10-STD126	KWR-400-D16A-ROD.121	400	L150x150x18	STD126	L150x150x18, Cut Length: 1634 mm	1/634	1	65/09	
KWR-400-D16A-ROD.121/SP10-STD126	KWR-400-D16A-ROD.121	400	L150x150x18	STD126	L150x150x18, Cut Length: 530 mm	0/530	1	21/12	
KWR-400-D16A-ROD.121/SP10-STD126	KWR-400-D16A-ROD.121	400	EXPANSION BOLT (TYPE HILTI HAS/HAS-E rod adhesive anchor M12)	STD126	HILTI DIMENISONS 12 mm dia x 110 mm long cylinder		1	0/00	
KWR-400-D16A-ROD.121/SP10-STD126	KWR-400-D16A-ROD.121	400	EXPANSION BOLT (TYPE HILTI HAS/HAS-E rod adhesive anchor M12)	STD126	HILTI DIMENISONS 12 mm dia x 110 mm long cylinder		1	0/00	
KWR-400-D16A-ROD.121/SP10-STD126	KWR-400-D16A-ROD.121	400	PLATE WITH HOLES (ACCORDING TO SUPPORT STANDARD)	STD126	10 mm Plate Steel, 310 mm x 190 mm		1	4/65	
KWR-400-D16A-ROD.121/SP11-STD127	KWR-400-D16A-ROD.121	400	CYLINDER OF CARBON STEEL	STD127	CYLINDER D: 20, L: 200 mm		1	0/00	
KWR-400-D16A-ROD.121/SP11-STD127	KWR-400-D16A-ROD.121	400	L150x150x18	STD127	L150x150x18, Cut Length: 1694 mm	1/694	1	67/48	
KWR-400-D16A-ROD.121/SP11-STD127	KWR-400-D16A-ROD.121	400	L150x150x18	STD127	L150x150x18, Cut Length: 530 mm	0/530	1	21/12	
KWR-400-D16A-ROD.121/SP11-STD127	KWR-400-D16A-ROD.121	400	EXPANSION BOLT (TYPE HILTI HAS/HAS-E rod adhesive anchor M12)	STD127	HILTI DIMENISONS 12 mm dia x 110 mm long cylinder		1	0/00	
KWR-400-D16A-ROD.121/SP11-STD127	KWR-400-D16A-ROD.121	400	EXPANSION BOLT (TYPE HILTI HAS/HAS-E rod adhesive anchor M12)	STD127	HILTI DIMENISONS 12 mm dia x 110 mm long cylinder		1	0/00	
KWR-400-D16A-ROD.121/SP11-STD127	KWR-400-D16A-ROD.121	400	PLATE WITH HOLES (ACCORDING TO SUPPORT STANDARD)	STD127	10 mm Plate Steel, 310 mm x 190 mm		1	4/65	
KWR-400-D16A-ROD.121/SP12-STD128	KWR-400-D16A-ROD.121	400	CYLINDER OF CARBON STEEL	STD128	CYLINDER D: 20, L: 200 mm		1	0/00	
KWR-400-D16A-ROD.121/SP12-STD128	KWR-400-D16A-ROD.121	400	L150x150x18	STD128	L150x150x18, Cut Length: 1754 mm	1/754	1	69/87	
KWR-400-D16A-ROD.121/SP12-STD128	KWR-400-D16A-ROD.121	400	L150x150x18	STD128	L150x150x18, Cut Length: 530 mm	0/530	1	21/12	
KWR-400-D16A-ROD.121/SP12-STD128	KWR-400-D16A-ROD.121	400	U BOLT	STD128	Lisega Size 404118 Metric U-Bolt		1	2/80	
KWR-400-D16A-ROD.121/SP12-STD128	KWR-400-D16A-ROD.121	400	EXPANSION BOLT (TYPE HILTI HAS/HAS-E rod adhesive anchor M12)	STD128	HILTI DIMENISONS 12 mm dia x 110 mm long cylinder		1	0/00	
KWR-400-D16A-ROD.121/SP12-STD128	KWR-400-D16A-ROD.121	400	EXPANSION BOLT (TYPE HILTI HAS/HAS-E rod adhesive anchor M12)	STD128	HILTI DIMENISONS 12 mm dia x 110 mm long cylinder		1	0/00	
KWR-400-D16A-ROD.121/SP12-STD128	KWR-400-D16A-ROD.121	400	PLATE WITH HOLES (ACCORDING TO SUPPORT STANDARD)	STD128	10 mm Plate Steel, 310 mm x 190 mm		1	4/65	
KWR-400-D16A-ROD.121/SP1-STD119	KWR-400-D16A-ROD.121	400	CYLINDER OF CARBON STEEL	STD119	CYLINDER D: 20, L: 200 mm		1	0/00	
KWR-400-D16A-ROD.121/SP1-STD119	KWR-400-D16A-ROD.121	400	L150x150x18	STD119	L150x150x18, Cut Length: 1099 mm	1/099	1	43/77	
KWR-400-D16A-ROD.121/SP1-STD119	KWR-400-D16A-ROD.121	400	L150x150x18	STD119	L150x150x18, Cut Length: 530 mm	0/530	1	21/12	
KWR-400-D16A-ROD.121/SP1-STD119	KWR-400-D16A-ROD.121	400	U BOLT	STD119	Lisega Size 404118 Metric U-Bolt		1	2/80	
KWR-400-D16A-ROD.121/SP1-STD119	KWR-400-D16A-ROD.121	400	EXPANSION BOLT (TYPE HILTI HAS/HAS-E rod adhesive anchor M12)	STD119	HILTI DIMENISONS 12 mm dia x 110 mm long cylinder		1	0/00	
KWR-400-D16A-ROD.121/SP1-STD119	KWR-400-D16A-ROD.121	400	EXPANSION BOLT (TYPE HILTI HAS/HAS-E rod adhesive anchor M12)	STD119	HILTI DIMENISONS 12 mm dia x 110 mm long cylinder		1	0/00	
KWR-400-D16A-ROD.121/SP1-STD119	KWR-400-D16A-ROD.121	400	PLATE WITH HOLES (ACCORDING TO SUPPORT STANDARD)	STD119	10 mm Plate Steel, 310 mm x 190 mm		1	4/65	
KWR-400-D16A-ROD.121/SP2-STD120	KWR-400-D16A-ROD.121	400	CYLINDER OF CARBON STEEL	STD120	CYLINDER D: 20, L: 200 mm		1	0/00	
KWR-400-D16A-ROD.121/SP2-STD120	KWR-400-D16A-ROD.121	400	L150x150x18	STD120	L150x150x18, Cut Length: 1159 mm	1/159	1	46/16	
KWR-400-D16A-ROD.121/SP2-STD120	KWR-400-D16A-ROD.121	400	L150x150x18	STD120	L150x150x18, Cut Length: 530 mm	0/530	1	21/12	
KWR-400-D16A-ROD.121/SP2-STD120	KWR-400-D16A-ROD.121	400	EXPANSION BOLT (TYPE HILTI HAS/HAS-E rod adhesive anchor M12)	STD120	HILTI DIMENISONS 12 mm dia x 110 mm long cylinder		1	0/00	
KWR-400-D16A-ROD.121/SP2-STD120	KWR-400-D16A-ROD.121	400	EXPANSION BOLT (TYPE HILTI HAS/HAS-E rod adhesive anchor M12)	STD120	HILTI DIMENISONS 12 mm dia x 110 mm long cylinder		1	0/00	
KWR-400-D16A-ROD.121/SP2-STD120	KWR-400-D16A-ROD.121	400	PLATE WITH HOLES (ACCORDING TO SUPPORT STANDARD)	STD120	10 mm Plate Steel, 310 mm x 190 mm		1	4/65	
KWR-400-D16A-ROD.121/SP3-STD121	KWR-400-D16A-ROD.121	400	CYLINDER OF CARBON STEEL	STD121	CYLINDER D: 20, L: 200 mm		1	0/00	
KWR-400-D16A-ROD.121/SP3-STD121	KWR-400-D16A-ROD.121	400	L150x150x18	STD121	L150x150x18, Cut Length: 1219 mm	1/219	1	48/55	
KWR-400-D16A-ROD.121/SP3-STD121	KWR-400-D16A-ROD.121	400	L150x150x18	STD121	L150x150x18, Cut Length: 530 mm	0/530	1	21/12	
KWR-400-D16A-ROD.121/SP3-STD121	KWR-400-D16A-ROD.121	400	EXPANSION BOLT (TYPE HILTI HAS/HAS-E rod adhesive anchor M12)	STD121	HILTI DIMENISONS 12 mm dia x 110 mm long cylinder		1	0/00	
KWR-400-D16A-ROD.121/SP3-STD121	KWR-400-D16A-ROD.121	400	EXPANSION BOLT (TYPE HILTI HAS/HAS-E rod adhesive anchor M12)	STD121	HILTI DIMENISONS 12 mm dia x 110 mm long cylinder		1	0/00	
KWR-400-D16A-ROD.121/SP3-STD121	KWR-400-D16A-ROD.121	400	PLATE WITH HOLES (ACCORDING TO SUPPORT STANDARD)	STD121	10 mm Plate Steel, 310 mm x 190 mm		1	4/65	
KWR-400-D16A-ROD.121/SP4-STD122	KWR-400-D16A-ROD.121	400	CYLINDER OF CARBON STEEL	STD122	CYLINDER D: 20, L: 200 mm		1	0/00	
KWR-400-D16A-ROD.121/SP4-STD122	KWR-400-D16A-ROD.121	400	L150x150x18	STD122	L150x150x18, Cut Length: 1273 mm	1/273	1	50/70	
KWR-400-D16A-ROD.121/SP4-STD122	KWR-400-D16A-ROD.121	400	L150x150x18	STD122	L150x150x18, Cut Length: 530 mm	0/530	1	21/12	
KWR-400-D16A-ROD.121/SP4-STD122	KWR-400-D16A-ROD.121	400	U BOLT	STD122	Lisega Size 404118 Metric U-Bolt		1	2/80	
KWR-400-D16A-ROD.121/SP4-STD122	KWR-400-D16A-ROD.121	400	EXPANSION BOLT (TYPE HILTI HAS/HAS-E rod adhesive anchor M12)	STD122	HILTI DIMENISONS 12 mm dia x 110 mm long cylinder		1	0/00	
KWR-400-D16A-ROD.121/SP4-STD122	KWR-400-D16A-ROD.121	400	EXPANSION BOLT (TYPE HILTI HAS/HAS-E rod adhesive anchor M12)	STD122	HILTI DIMENISONS 12 mm dia x 110 mm long cylinder		1	0/00	
KWR-400-D16A-ROD.121/SP4-STD122	KWR-400-D16A-ROD.121	400	PLATE WITH HOLES (ACCORDING TO SUPPORT STANDARD)	STD122	10 mm Plate Steel, 310 mm x 190 mm		1	4/65	
KWR-400-D16A-ROD.121/SP5-STD123	KWR-400-D16A-ROD.121	400	CYLINDER OF CARBON STEEL	STD123	CYLINDER D: 20, L: 200 mm		1	0/00	
KWR-400-D16A-ROD.121/SP5-STD123	KWR-400-D16A-ROD.121	400	L150x150x18	STD123	L150x150x18, Cut Length: 530 mm	0/530	1	21/12	
KWR-400-D16A-ROD.121/SP5-STD123	KWR-400-D16A-ROD.121	400	L150x150x18	STD123	L150x150x18, Cut Length: 1327 mm	1/327	1	52/86	
KWR-400-D16A-ROD.121/SP5-STD123	KWR-400-D16A-ROD.121	400	EXPANSION BOLT (TYPE HILTI HAS/HAS-E rod adhesive anchor M12)	STD123	HILTI DIMENISONS 12 mm dia x 110 mm long cylinder		1	0/00	
KWR-400-D16A-ROD.121/SP5-STD123	KWR-400-D16A-ROD.121	400	EXPANSION BOLT (TYPE HILTI HAS/HAS-E rod adhesive anchor M12)	STD123	HILTI DIMENISONS 12 mm dia x 110 mm long cylinder		1	0/00	
KWR-400-D16A-ROD.121/SP5-STD123	KWR-400-D16A-ROD.121	400	PLATE WITH HOLES (ACCORDING TO SUPPORT STANDARD)	STD123	10 mm Plate Steel, 310 mm x 190 mm		1	4/65	
KWR-400-D16A-ROD.121/SP6-STD124	KWR-400-D16A-ROD.121	400	CYLINDER OF CARBON STEEL	STD124	CYLINDER D: 20, L: 200 mm		1	0/00	
KWR-400-D16A-ROD.121/SP6-STD124	KWR-400-D16A-ROD.121	400	L150x150x18	STD124	L150x150x18, Cut Length: 550 mm	0/550	1	21/91	
KWR-400-D16A-ROD.121/SP6-STD124	KWR-400-D16A-ROD.121	400	EXPANSION BOLT (TYPE HILTI HAS/HAS-E rod adhesive anchor M12)	STD124	HILTI DIMENISONS 12 mm dia x 110 mm long cylinder		1	0/00	
KWR-400-D16A-ROD.121/SP6-STD124	KWR-400-D16A-ROD.121	400	EXPANSION BOLT (TYPE HILTI HAS/HAS-E rod adhesive anchor M12)	STD124	HILTI DIMENISONS 12 mm dia x 110 mm long cylinder		1	0/00	
KWR-400-D16A-ROD.121/SP6-STD124	KWR-400-D16A-ROD.121	400	PLATE WITH HOLES (ACCORDING TO SUPPORT STANDARD)	STD124	10 mm Plate Steel, 310 mm x 190 mm		1	4/65	
KWR-400-D16A-ROD.121/SP7-STD124	KWR-400-D16A-ROD.121	400	CYLINDER OF CARBON STEEL	STD124	CYLINDER D: 20, L: 200 mm		1	0/00	
KWR-400-D16A-ROD.121/SP7-STD124	KWR-400-D16A-ROD.121	400	L150x150x18	STD124	L150x150x18, Cut Length: 550 mm	0/550	1	21/91	
KWR-400-D16A-ROD.121/SP7-STD124	KWR-400-D16A-ROD.121	400	U BOLT	STD124	Lisega Size 404118 Metric U-Bolt		1	2/80	

SUPPORT TAG	PIPE TAG	DN	TYPE OF ELEMENT	STD	DESCRIPTION	LENGTH (M)	QUANT.	WEIGHT	PRICE
KWR-400-D16A-ROD.121/SP7-STD124	KWR-400-D16A-ROD.121	400	EXPANSION BOLT (TYPE HILTI HAS/HAS-E rod adhesive anchor M12)	STD124	HILTI DIMENISONS 12 mm dia x 110 mm long cylinder		1	0/00	
KWR-400-D16A-ROD.121/SP7-STD124	KWR-400-D16A-ROD.121	400	EXPANSION BOLT (TYPE HILTI HAS/HAS-E rod adhesive anchor M12)	STD124	HILTI DIMENISONS 12 mm dia x 110 mm long cylinder		1	0/00	
KWR-400-D16A-ROD.121/SP7-STD124	KWR-400-D16A-ROD.121	400	PLATE WITH HOLES (ACCORDING TO SUPPORT STANDARD)	STD124	10 mm Plate Steel, 310 mm x 190 mm		1	4/65	
KWR-400-D16A-ROD.121/SP8-STD124	KWR-400-D16A-ROD.121	400	CYLINDER OF CARBON STEEL	STD124	CYLINDER D: 20, L: 200 mm		1	0/00	
KWR-400-D16A-ROD.121/SP8-STD124	KWR-400-D16A-ROD.121	400	L150x150x18	STD124	L150x150x18, Cut Length: 550 mm	0/550	1	21/91	
KWR-400-D16A-ROD.121/SP8-STD124	KWR-400-D16A-ROD.121	400	EXPANSION BOLT (TYPE HILTI HAS/HAS-E rod adhesive anchor M12)	STD124	HILTI DIMENISONS 12 mm dia x 110 mm long cylinder		1	0/00	
KWR-400-D16A-ROD.121/SP8-STD124	KWR-400-D16A-ROD.121	400	EXPANSION BOLT (TYPE HILTI HAS/HAS-E rod adhesive anchor M12)	STD124	HILTI DIMENISONS 12 mm dia x 110 mm long cylinder		1	0/00	
KWR-400-D16A-ROD.121/SP8-STD124	KWR-400-D16A-ROD.121	400	PLATE WITH HOLES (ACCORDING TO SUPPORT STANDARD)	STD124	10 mm Plate Steel, 310 mm x 190 mm		1	4/65	
KWR-400-D16A-ROD.121/SP9-STD125	KWR-400-D16A-ROD.121	400	CYLINDER OF CARBON STEEL	STD125	CYLINDER D: 20, L: 200 mm		1	0/00	
KWR-400-D16A-ROD.121/SP9-STD125	KWR-400-D16A-ROD.121	400	L150x150x18	STD125	L150x150x18, Cut Length: 1574 mm	1/574	1	62/70	
KWR-400-D16A-ROD.121/SP9-STD125	KWR-400-D16A-ROD.121	400	L150x150x18	STD125	L150x150x18, Cut Length: 530 mm	0/530	1	21/12	
KWR-400-D16A-ROD.121/SP9-STD125	KWR-400-D16A-ROD.121	400	U BOLT	STD125	Lisega Size 404118 Metric U-Bolt		1	2/80	
KWR-400-D16A-ROD.121/SP9-STD125	KWR-400-D16A-ROD.121	400	EXPANSION BOLT (TYPE HILTI HAS/HAS-E rod adhesive anchor M12)	STD125	HILTI DIMENISONS 12 mm dia x 110 mm long cylinder		1	0/00	
KWR-400-D16A-ROD.121/SP9-STD125	KWR-400-D16A-ROD.121	400	EXPANSION BOLT (TYPE HILTI HAS/HAS-E rod adhesive anchor M12)	STD125	HILTI DIMENISONS 12 mm dia x 110 mm long cylinder		1	0/00	
KWR-400-D16A-ROD.121/SP9-STD125	KWR-400-D16A-ROD.121	400	PLATE WITH HOLES (ACCORDING TO SUPPORT STANDARD)	STD125	10 mm Plate Steel, 310 mm x 190 mm		1	4/65	
KWS-150-D16A-ROD.73/SP1	KWS-150-D16A-ROD.73	150	L150x150x18		L150x150x18, Cut Length: 785 mm	0/818	1	31/28	
KWS-150-D16A-ROD.73/SP1	KWS-150-D16A-ROD.73	150	U BOLT		Lisega Size 401718 Metric U-Bolt		1	0/91	
KWS-150-D16A-ROD.73/SP2-STD12	KWS-150-D16A-ROD.73	150	L150x150x18	STD12	L150x150x18, Cut Length: 785 mm	0/818	1	31/28	
KWS-150-D16A-ROD.73/SP2-STD12	KWS-150-D16A-ROD.73	150	EXPANSION BOLT (TYPE HILTI HAS/HAS-E rod adhesive anchor M12)	STD12	HILTI DIMENISONS 12 mm dia x 110 mm long cylinder		1	0/00	
KWS-150-D16A-ROD.73/SP2-STD12	KWS-150-D16A-ROD.73	150	EXPANSION BOLT (TYPE HILTI HAS/HAS-E rod adhesive anchor M12)	STD12	HILTI DIMENISONS 12 mm dia x 110 mm long cylinder		1	0/00	
KWS-150-D16A-ROD.73/SP2-STD12	KWS-150-D16A-ROD.73	150	PLATE WITH HOLES (ACCORDING TO SUPPORT STANDARD)	STD12	10 mm Plate Steel, 310 mm x 190 mm		1	4/65	
KWS-150-D16A-ROD.73/SP3-STD12	KWS-150-D16A-ROD.73	150	L150x150x18	STD12	L150x150x18, Cut Length: 785 mm	0/818	1	31/28	
KWS-150-D16A-ROD.73/SP3-STD12	KWS-150-D16A-ROD.73	150	EXPANSION BOLT (TYPE HILTI HAS/HAS-E rod adhesive anchor M12)	STD12	HILTI DIMENISONS 12 mm dia x 110 mm long cylinder		1	0/00	
KWS-150-D16A-ROD.73/SP3-STD12	KWS-150-D16A-ROD.73	150	EXPANSION BOLT (TYPE HILTI HAS/HAS-E rod adhesive anchor M12)	STD12	HILTI DIMENISONS 12 mm dia x 110 mm long cylinder		1	0/00	
KWS-150-D16A-ROD.73/SP3-STD12	KWS-150-D16A-ROD.73	150	PLATE WITH HOLES (ACCORDING TO SUPPORT STANDARD)	STD12	10 mm Plate Steel, 310 mm x 190 mm		1	4/65	
KWS-150-D16A-ROD.73/SP4-STD12	KWS-150-D16A-ROD.73	150	L150x150x18	STD12	L150x150x18, Cut Length: 785 mm	0/818	1	31/28	
KWS-150-D16A-ROD.73/SP4-STD12	KWS-150-D16A-ROD.73	150	U BOLT	STD12	Lisega Size 401718 Metric U-Bolt		1	0/91	
KWS-150-D16A-ROD.73/SP4-STD12	KWS-150-D16A-ROD.73	150	EXPANSION BOLT (TYPE HILTI HAS/HAS-E rod adhesive anchor M12)	STD12	HILTI DIMENISONS 12 mm dia x 110 mm long cylinder		1	0/00	
KWS-150-D16A-ROD.73/SP4-STD12	KWS-150-D16A-ROD.73	150	EXPANSION BOLT (TYPE HILTI HAS/HAS-E rod adhesive anchor M12)	STD12	HILTI DIMENISONS 12 mm dia x 110 mm long cylinder		1	0/00	
KWS-150-D16A-ROD.73/SP4-STD12	KWS-150-D16A-ROD.73	150	PLATE WITH HOLES (ACCORDING TO SUPPORT STANDARD)	STD12	10 mm Plate Steel, 310 mm x 190 mm		1	4/65	
KWS-150-D16A-ROD.75/SP1-STD115	KWS-150-D16A-ROD.75	150	L150x150x18	STD115	L150x150x18, Cut Length: 350 mm	0/350	1	13/94	
KWS-150-D16A-ROD.75/SP1-STD115	KWS-150-D16A-ROD.75	150	L150x150x18	STD115	L150x150x18, Cut Length: 803 mm	0/803	1	31/98	
KWS-150-D16A-ROD.75/SP1-STD115	KWS-150-D16A-ROD.75	150	U BOLT	STD115	Lisega Size 401718 Metric U-Bolt		1	0/91	
KWS-150-D16A-ROD.75/SP1-STD115	KWS-150-D16A-ROD.75	150	EXPANSION BOLT (TYPE HILTI HAS/HAS-E rod adhesive anchor M12)	STD115	HILTI DIMENISONS 12 mm dia x 110 mm long cylinder		1	0/00	
KWS-150-D16A-ROD.75/SP1-STD115	KWS-150-D16A-ROD.75	150	EXPANSION BOLT (TYPE HILTI HAS/HAS-E rod adhesive anchor M12)	STD115	HILTI DIMENISONS 12 mm dia x 110 mm long cylinder		1	0/00	
KWS-150-D16A-ROD.75/SP1-STD115	KWS-150-D16A-ROD.75	150	PLATE WITH HOLES (ACCORDING TO SUPPORT STANDARD)	STD115	10 mm Plate Steel, 310 mm x 190 mm		1	4/65	
KWS-150-D16A-ROD.75/SP2-STD115	KWS-150-D16A-ROD.75	150	L150x150x18	STD115	L150x150x18, Cut Length: 350 mm	0/350	1	13/94	
KWS-150-D16A-ROD.75/SP2-STD115	KWS-150-D16A-ROD.75	150	L150x150x18	STD115	L150x150x18, Cut Length: 803 mm	0/803	1	31/98	
KWS-150-D16A-ROD.75/SP2-STD115	KWS-150-D16A-ROD.75	150	U BOLT	STD115	Lisega Size 401718 Metric U-Bolt		1	0/91	
KWS-150-D16A-ROD.75/SP2-STD115	KWS-150-D16A-ROD.75	150	EXPANSION BOLT (TYPE HILTI HAS/HAS-E rod adhesive anchor M12)	STD115	HILTI DIMENISONS 12 mm dia x 110 mm long cylinder		1	0/00	
KWS-150-D16A-ROD.75/SP2-STD115	KWS-150-D16A-ROD.75	150	EXPANSION BOLT (TYPE HILTI HAS/HAS-E rod adhesive anchor M12)	STD115	HILTI DIMENISONS 12 mm dia x 110 mm long cylinder		1	0/00	
KWS-150-D16A-ROD.75/SP2-STD115	KWS-150-D16A-ROD.75	150	PLATE WITH HOLES (ACCORDING TO SUPPORT STANDARD)	STD115	10 mm Plate Steel, 310 mm x 190 mm		1	4/65	
KWS-150-D16A-ROD.75/SP3-STD115	KWS-150-D16A-ROD.75	150	L150x150x18	STD115	L150x150x18, Cut Length: 350 mm	0/350	1	13/94	
KWS-150-D16A-ROD.75/SP3-STD115	KWS-150-D16A-ROD.75	150	L150x150x18	STD115	L150x150x18, Cut Length: 803 mm	0/803	1	31/98	
KWS-150-D16A-ROD.75/SP3-STD115	KWS-150-D16A-ROD.75	150	U BOLT	STD115	Lisega Size 401718 Metric U-Bolt		1	0/91	
KWS-150-D16A-ROD.75/SP3-STD115	KWS-150-D16A-ROD.75	150	EXPANSION BOLT (TYPE HILTI HAS/HAS-E rod adhesive anchor M12)	STD115	HILTI DIMENISONS 12 mm dia x 110 mm long cylinder		1	0/00	
KWS-150-D16A-ROD.75/SP3-STD115	KWS-150-D16A-ROD.75	150	EXPANSION BOLT (TYPE HILTI HAS/HAS-E rod adhesive anchor M12)	STD115	HILTI DIMENISONS 12 mm dia x 110 mm long cylinder		1	0/00	
KWS-150-D16A-ROD.75/SP3-STD115	KWS-150-D16A-ROD.75	150	PLATE WITH HOLES (ACCORDING TO SUPPORT STANDARD)	STD115	10 mm Plate Steel, 310 mm x 190 mm		1	4/65	
KWS-150-D16A-ROD.75/SP4-STD115	KWS-150-D16A-ROD.75	150	L150x150x18	STD115	L150x150x18, Cut Length: 350 mm	0/350	1	13/94	
KWS-150-D16A-ROD.75/SP4-STD115	KWS-150-D16A-ROD.75	150	L150x150x18	STD115	L150x150x18, Cut Length: 803 mm	0/803	1	31/98	
KWS-150-D16A-ROD.75/SP4-STD115	KWS-150-D16A-ROD.75	150	U BOLT	STD115	Lisega Size 401718 Metric U-Bolt		1	0/91	
KWS-150-D16A-ROD.75/SP4-STD115	KWS-150-D16A-ROD.75	150	EXPANSION BOLT (TYPE HILTI HAS/HAS-E rod adhesive anchor M12)	STD115	HILTI DIMENISONS 12 mm dia x 110 mm long cylinder		1	0/00	
KWS-150-D16A-ROD.75/SP4-STD115	KWS-150-D16A-ROD.75	150	EXPANSION BOLT (TYPE HILTI HAS/HAS-E rod adhesive anchor M12)	STD115	HILTI DIMENISONS 12 mm dia x 110 mm long cylinder		1	0/00	
KWS-150-D16A-ROD.75/SP4-STD115	KWS-150-D16A-ROD.75	150	PLATE WITH HOLES (ACCORDING TO SUPPORT STANDARD)	STD115	10 mm Plate Steel, 310 mm x 190 mm		1	4/65	
KWS-150-D16-A-ROD.89/SP1-STD109	KWS-150-D16-A-ROD.89	150	L150x150x18	STD109	L150x150x18, Cut Length: 781 mm	0/781	1	31/10	
KWS-150-D16-A-ROD.89/SP1-STD109	KWS-150-D16-A-ROD.89	150	L150x150x18	STD109	L150x150x18, Cut Length: 350 mm	0/350	1	13/94	
KWS-150-D16-A-ROD.89/SP1-STD109	KWS-150-D16-A-ROD.89	150	U BOLT	STD109	Lisega Size 401718 Metric U-Bolt		1	0/91	
KWS-150-D16-A-ROD.89/SP1-STD109	KWS-150-D16-A-ROD.89	150	EXPANSION BOLT (TYPE HILTI HAS/HAS-E rod adhesive anchor M12)	STD109	HILTI DIMENISONS 12 mm dia x 110 mm long cylinder		1	0/00	
KWS-150-D16-A-ROD.89/SP1-STD109	KWS-150-D16-A-ROD.89	150	EXPANSION BOLT (TYPE HILTI HAS/HAS-E rod adhesive anchor M12)	STD109	HILTI DIMENISONS 12 mm dia x 110 mm long cylinder		1	0/00	

UPPORT TAG	PIPE TAG	DN	TYPE OF ELEMENT	STD	DESCRIPTION	LENGTH (M)	QUANT.	WEIGHT	PRICE
KWS-150-D16-A-ROD.89/SP1-STD109	KWS-150-D16-A-ROD.89	150	PLATE WITH HOLES (ACCORDING TO SUPPORT STANDARD)	STD109	10 mm Plate Steel, 310 mm x 190 mm		1	4/65	
KWS-150-D16-A-ROD.98/SP1-STD116	KWS-150-D16-A-ROD.98	150	L150x150x18	STD116	L150x150x18, Cut Length: 450 mm	0/450	1	17/93	
KWS-150-D16-A-ROD.98/SP1-STD116	KWS-150-D16-A-ROD.98	150	L150x150x18	STD116	L150x150x18, Cut Length: 836 mm	0/836	1	33/29	
KWS-150-D16-A-ROD.98/SP1-STD116	KWS-150-D16-A-ROD.98	150	U BOLT	STD116	Lisega Size 401718 Metric U-Bolt		1	0/91	
KWS-150-D16-A-ROD.98/SP1-STD116	KWS-150-D16-A-ROD.98	150	EXPANSION BOLT (TYPE HILTI HAS/HAS-E rod adhesive anchor M12)	STD116	HILTI DIMENISONS 12 mm dia x 110 mm long cylinder		1	0/00	
KWS-150-D16-A-ROD.98/SP1-STD116	KWS-150-D16-A-ROD.98	150	EXPANSION BOLT (TYPE HILTI HAS/HAS-E rod adhesive anchor M12)	STD116	HILTI DIMENISONS 12 mm dia x 110 mm long cylinder		1	0/00	
KWS-150-D16-A-ROD.98/SP1-STD116	KWS-150-D16-A-ROD.98	150	PLATE WITH HOLES (ACCORDING TO SUPPORT STANDARD)	STD116	10 mm Plate Steel, 310 mm x 190 mm		1	4/65	
KWS-200-D16A-ROD.76/SP1-STD111	KWS-200-D16A-ROD.76	200	L150x150x18	STD111	L150x150x18, Cut Length: 350 mm	0/350	1	13/94	
KWS-200-D16A-ROD.76/SP1-STD111	KWS-200-D16A-ROD.76	200	U BOLT	STD111	Lisega Size 402218 Metric U-Bolt		1	1/08	
KWS-200-D16A-ROD.76/SP1-STD111	KWS-200-D16A-ROD.76	200	EXPANSION BOLT (TYPE HILTI HAS/HAS-E rod adhesive anchor M12)	STD111	HILTI DIMENISONS 12 mm dia x 110 mm long cylinder		1	0/00	
KWS-200-D16A-ROD.76/SP1-STD111	KWS-200-D16A-ROD.76	200	EXPANSION BOLT (TYPE HILTI HAS/HAS-E rod adhesive anchor M12)	STD111	HILTI DIMENISONS 12 mm dia x 110 mm long cylinder		1	0/00	
KWS-200-D16A-ROD.76/SP1-STD111	KWS-200-D16A-ROD.76	200	PLATE WITH HOLES (ACCORDING TO SUPPORT STANDARD)	STD111	10 mm Plate Steel, 310 mm x 190 mm		1	4/65	
KWS-200-D16A-ROD.76/SP2-STD111	KWS-200-D16A-ROD.76	200	L150x150x18	STD111	L150x150x18, Cut Length: 350 mm	0/350	1	13/94	
KWS-200-D16A-ROD.76/SP2-STD111	KWS-200-D16A-ROD.76	200	U BOLT	STD111	Lisega Size 402218 Metric U-Bolt		1	1/08	
KWS-200-D16A-ROD.76/SP2-STD111	KWS-200-D16A-ROD.76	200	EXPANSION BOLT (TYPE HILTI HAS/HAS-E rod adhesive anchor M12)	STD111	HILTI DIMENISONS 12 mm dia x 110 mm long cylinder		1	0/00	
KWS-200-D16A-ROD.76/SP2-STD111	KWS-200-D16A-ROD.76	200	EXPANSION BOLT (TYPE HILTI HAS/HAS-E rod adhesive anchor M12)	STD111	HILTI DIMENISONS 12 mm dia x 110 mm long cylinder		1	0/00	
KWS-200-D16A-ROD.76/SP2-STD111	KWS-200-D16A-ROD.76	200	PLATE WITH HOLES (ACCORDING TO SUPPORT STANDARD)	STD111	10 mm Plate Steel, 310 mm x 190 mm		1	4/65	
KWS-200-D16A-ROD.76/SP3-STD111	KWS-200-D16A-ROD.76	200	L150x150x18	STD111	L150x150x18, Cut Length: 350 mm	0/350	1	13/94	
KWS-200-D16A-ROD.76/SP3-STD111	KWS-200-D16A-ROD.76	200	U BOLT	STD111	Lisega Size 402218 Metric U-Bolt		1	1/08	
KWS-200-D16A-ROD.76/SP3-STD111	KWS-200-D16A-ROD.76	200	EXPANSION BOLT (TYPE HILTI HAS/HAS-E rod adhesive anchor M12)	STD111	HILTI DIMENISONS 12 mm dia x 110 mm long cylinder		1	0/00	
KWS-200-D16A-ROD.76/SP3-STD111	KWS-200-D16A-ROD.76	200	EXPANSION BOLT (TYPE HILTI HAS/HAS-E rod adhesive anchor M12)	STD111	HILTI DIMENISONS 12 mm dia x 110 mm long cylinder		1	0/00	
KWS-200-D16A-ROD.76/SP3-STD111	KWS-200-D16A-ROD.76	200	PLATE WITH HOLES (ACCORDING TO SUPPORT STANDARD)	STD111	10 mm Plate Steel, 310 mm x 190 mm		1	4/65	
KWS-200-D16A-ROD.81/SP1-STD111	KWS-200-D16A-ROD.81	200	L150x150x18	STD111	L150x150x18, Cut Length: 350 mm	0/350	1	13/94	
KWS-200-D16A-ROD.81/SP1-STD111	KWS-200-D16A-ROD.81	200	U BOLT	STD111	Lisega Size 402218 Metric U-Bolt		1	1/08	
KWS-200-D16A-ROD.81/SP1-STD111	KWS-200-D16A-ROD.81	200	EXPANSION BOLT (TYPE HILTI HAS/HAS-E rod adhesive anchor M12)	STD111	HILTI DIMENISONS 12 mm dia x 110 mm long cylinder		1	0/00	
KWS-200-D16A-ROD.81/SP1-STD111	KWS-200-D16A-ROD.81	200	EXPANSION BOLT (TYPE HILTI HAS/HAS-E rod adhesive anchor M12)	STD111	HILTI DIMENISONS 12 mm dia x 110 mm long cylinder		1	0/00	
KWS-200-D16A-ROD.81/SP1-STD111	KWS-200-D16A-ROD.81	200	PLATE WITH HOLES (ACCORDING TO SUPPORT STANDARD)	STD111	10 mm Plate Steel, 310 mm x 190 mm		1	4/65	
KWS-200-D16A-ROD.81/SP2-STD111	KWS-200-D16A-ROD.81	200	L150x150x18	STD111	L150x150x18, Cut Length: 1250 mm	1/150	1	49/80	
KWS-200-D16A-ROD.81/SP2-STD111	KWS-200-D16A-ROD.81	200	U BOLT	STD111	Lisega Size 402218 Metric U-Bolt		1	1/08	
KWS-200-D16A-ROD.81/SP2-STD111	KWS-200-D16A-ROD.81	200	EXPANSION BOLT (TYPE HILTI HAS/HAS-E rod adhesive anchor M12)	STD111	HILTI DIMENISONS 12 mm dia x 110 mm long cylinder		1	0/00	
KWS-200-D16A-ROD.81/SP2-STD111	KWS-200-D16A-ROD.81	200	EXPANSION BOLT (TYPE HILTI HAS/HAS-E rod adhesive anchor M12)	STD111	HILTI DIMENISONS 12 mm dia x 110 mm long cylinder		1	0/00	
KWS-200-D16A-ROD.81/SP2-STD111	KWS-200-D16A-ROD.81	200	PLATE WITH HOLES (ACCORDING TO SUPPORT STANDARD)	STD111	10 mm Plate Steel, 310 mm x 190 mm		1	4/65	
KWS-200-D16A-ROD.81/SP3-STD111	KWS-200-D16A-ROD.81	200	U BOLT	STD111	Lisega Size 402218 Metric U-Bolt		1	1/08	
KWS-25-D16-A-ROD.88/SP1-STD129	KWS-25-D16-A-ROD.88	25	L70x70x7	STD129	L70x70x7, Cut Length: 900 mm	0/900	1	6/58	
KWS-25-D16-A-ROD.88/SP1-STD129	KWS-25-D16-A-ROD.88	25	U BOLT	STD129	Lisega Size 400318 Metric U-Bolt		1	0/05	
KWS-25-D16-A-ROD.97/SP1	KWS-25-D16-A-ROD.97	25	U BOLT		Lisega Size 400318 Metric U-Bolt		1	0/05	
KWS-300-D16A-ROD.80/SP1-STD12	KWS-300-D16A-ROD.80	300	L150x150x18	STD12	L150x150x18, Cut Length: 785 mm	0/818	1	31/28	
KWS-300-D16A-ROD.80/SP1-STD12	KWS-300-D16A-ROD.80	300	U BOLT	STD12	Lisega Size 403218 Metric U-Bolt		1	2/35	
KWS-300-D16A-ROD.80/SP1-STD12	KWS-300-D16A-ROD.80	300	EXPANSION BOLT (TYPE HILTI HAS/HAS-E rod adhesive anchor M12)	STD12	HILTI DIMENISONS 12 mm dia x 110 mm long cylinder		1	0/00	
KWS-300-D16A-ROD.80/SP1-STD12	KWS-300-D16A-ROD.80	300	EXPANSION BOLT (TYPE HILTI HAS/HAS-E rod adhesive anchor M12)	STD12	HILTI DIMENISONS 12 mm dia x 110 mm long cylinder		1	0/00	
KWS-300-D16A-ROD.80/SP1-STD12	KWS-300-D16A-ROD.80	300	PLATE WITH HOLES (ACCORDING TO SUPPORT STANDARD)	STD12	10 mm Plate Steel, 310 mm x 190 mm		1	4/65	
KWS-300-D16A-ROD.80/SP2	KWS-300-D16A-ROD.80	300	U BOLT		Lisega Size 403218 Metric U-Bolt		1	2/35	
KWS-300-D16A-ROD.80/SP3	KWS-300-D16A-ROD.80	300	U BOLT		Lisega Size 403218 Metric U-Bolt		1	2/35	
KWS-40-D16A-ROD.104/SP1	KWS-40-D16A-ROD.104	40	U BOLT		Lisega Size 400518 Metric U-Bolt		1	0/16	
KWS-40-D16A-ROD.104/SP2	KWS-40-D16A-ROD.104	40	U BOLT		Lisega Size 400518 Metric U-Bolt		1	0/16	
KWS-40-D16A-ROD.104/SP3	KWS-40-D16A-ROD.104	40	U BOLT		Lisega Size 400518 Metric U-Bolt		1	0/16	
KWS-40-D16A-ROD.106/SP1	KWS-40-D16A-ROD.106	40	U BOLT		Lisega Size 400518 Metric U-Bolt		1	0/16	
KWS-40-D16A-ROD.106/SP2	KWS-40-D16A-ROD.106	40	U BOLT		Lisega Size 400518 Metric U-Bolt		1	0/16	
KWS-40-D16A-ROD.106/SP3	KWS-40-D16A-ROD.106	40	U BOLT		Lisega Size 400518 Metric U-Bolt		1	0/16	
KWS-40-D16A-ROD.108/SP1	KWS-40-D16A-ROD.108	40	U BOLT		Lisega Size 400518 Metric U-Bolt		1	0/16	
KWS-40-D16A-ROD.108/SP2	KWS-40-D16A-ROD.108	40	U BOLT		Lisega Size 400518 Metric U-Bolt		1	0/16	
KWS-40-D16A-ROD.108/SP3	KWS-40-D16A-ROD.108	40	U BOLT		Lisega Size 400518 Metric U-Bolt		1	0/16	
KWS-40-D16A-ROD.110/SP1	KWS-40-D16A-ROD.110	40	U BOLT		Lisega Size 400518 Metric U-Bolt		1	0/16	
KWS-40-D16A-ROD.110/SP2	KWS-40-D16A-ROD.110	40	U BOLT		Lisega Size 400518 Metric U-Bolt		1	0/16	
KWS-40-D16A-ROD.110/SP3	KWS-40-D16A-ROD.110	40	U BOLT		Lisega Size 400518 Metric U-Bolt		1	0/16	
KWS-40-D16A-ROD.112/SP1	KWS-40-D16A-ROD.112	40	U BOLT		Lisega Size 400518 Metric U-Bolt		1	0/16	
KWS-40-D16A-ROD.112/SP2	KWS-40-D16A-ROD.112	40	U BOLT		Lisega Size 400518 Metric U-Bolt		1	0/16	
KWS-40-D16A-ROD.112/SP3	KWS-40-D16A-ROD.112	40	U BOLT		Lisega Size 400518 Metric U-Bolt		1	0/16	
KWS-50-D16A-ROD.105/SP1-STD131	KWS-50-D16A-ROD.105	50	L70x70x7	STD131	L70x70x7, Cut Length: 800 mm	0/848	1	5/85	

SUPPORT TAG	PIPE TAG	DN	TYPE OF ELEMENT	STD	DESCRIPTION	LENGTH (M)	QUANT.	WEIGHT	PRICE
KWS-50-D16A-ROD.105/SP1-STD131	KWS-50-D16A-ROD.105	50	L70x70x7	STD131	L70x70x7, Cut Length: 320 mm	0/368	1	2/34	
KWS-50-D16A-ROD.105/SP1-STD131	KWS-50-D16A-ROD.105	50	L70x70x7	STD131	L70x70x7, Cut Length: 320 mm	0/368	1	2/34	
KWS-50-D16A-ROD.105/SP1-STD131	KWS-50-D16A-ROD.105	50	U BOLT	STD131	Lisega Size 400618 Metric U-Bolt		1	0/18	
KWS-50-D16A-ROD.105/SP1-STD131	KWS-50-D16A-ROD.105	50	EXPANSION BOLT (TYPE HILTI HAS/HAS-E rod adhesive anchor M12)	STD131	HILTI DIMENISONS 12 mm dia x 110 mm long cylinder		1	0/00	
KWS-50-D16A-ROD.105/SP1-STD131	KWS-50-D16A-ROD.105	50	EXPANSION BOLT (TYPE HILTI HAS/HAS-E rod adhesive anchor M12)	STD131	HILTI DIMENISONS 12 mm dia x 110 mm long cylinder		1	0/00	
KWS-50-D16A-ROD.105/SP1-STD131	KWS-50-D16A-ROD.105	50	PLATE WITH HOLES (ACCORDING TO SUPPORT STANDARD)	STD131	10 mm Plate Steel, 230 mm x 100 mm		1	1/82	
KWS-50-D16A-ROD.105/SP2-STD132	KWS-50-D16A-ROD.105	50	L70x70x7	STD132	L70x70x7, Cut Length: 541 mm	0/589	1	3/95	
KWS-50-D16A-ROD.105/SP2-STD132	KWS-50-D16A-ROD.105	50	L70x70x7	STD132	L70x70x7, Cut Length: 720 mm	0/768	1	5/26	
KWS-50-D16A-ROD.105/SP2-STD132	KWS-50-D16A-ROD.105	50	U BOLT	STD132	Lisega Size 400618 Metric U-Bolt		1	0/18	
KWS-50-D16A-ROD.105/SP2-STD132	KWS-50-D16A-ROD.105	50	EXPANSION BOLT (TYPE HILTI HAS/HAS-E rod adhesive anchor M12)	STD132	HILTI DIMENISONS 12 mm dia x 110 mm long cylinder		1	0/00	
KWS-50-D16A-ROD.105/SP2-STD132	KWS-50-D16A-ROD.105	50	EXPANSION BOLT (TYPE HILTI HAS/HAS-E rod adhesive anchor M12)	STD132	HILTI DIMENISONS 12 mm dia x 110 mm long cylinder		1	0/00	
KWS-50-D16A-ROD.105/SP2-STD132	KWS-50-D16A-ROD.105	50	PLATE WITH HOLES (ACCORDING TO SUPPORT STANDARD)	STD132	10 mm Plate Steel, 230 mm x 100 mm		1	1/82	
KWS-50-D16A-ROD.105/SP3	KWS-50-D16A-ROD.105	50	U BOLT		Lisega Size 400618 Metric U-Bolt		1	0/18	
KWS-50-D16A-ROD.107/SP1-STD132	KWS-50-D16A-ROD.107	50	L70x70x7	STD132	L70x70x7, Cut Length: 541 mm	0/589	1	3/95	
KWS-50-D16A-ROD.107/SP1-STD132	KWS-50-D16A-ROD.107	50	L70x70x7	STD132	L70x70x7, Cut Length: 720 mm	0/768	1	5/26	
KWS-50-D16A-ROD.107/SP1-STD132	KWS-50-D16A-ROD.107	50	U BOLT	STD132	Lisega Size 400618 Metric U-Bolt		1	0/18	
KWS-50-D16A-ROD.107/SP1-STD132	KWS-50-D16A-ROD.107	50	EXPANSION BOLT (TYPE HILTI HAS/HAS-E rod adhesive anchor M12)	STD132	HILTI DIMENISONS 12 mm dia x 110 mm long cylinder		1	0/00	
KWS-50-D16A-ROD.107/SP1-STD132	KWS-50-D16A-ROD.107	50	EXPANSION BOLT (TYPE HILTI HAS/HAS-E rod adhesive anchor M12)	STD132	HILTI DIMENISONS 12 mm dia x 110 mm long cylinder		1	0/00	
KWS-50-D16A-ROD.107/SP1-STD132	KWS-50-D16A-ROD.107	50	PLATE WITH HOLES (ACCORDING TO SUPPORT STANDARD)	STD132	10 mm Plate Steel, 230 mm x 100 mm		1	1/82	
KWS-50-D16A-ROD.107/SP2-STD132	KWS-50-D16A-ROD.107	50	L70x70x7	STD132	L70x70x7, Cut Length: 541 mm	0/589	1	3/95	
KWS-50-D16A-ROD.107/SP2-STD132	KWS-50-D16A-ROD.107	50	L70x70x7	STD132	L70x70x7, Cut Length: 720 mm	0/768	1	5/26	
KWS-50-D16A-ROD.107/SP2-STD132	KWS-50-D16A-ROD.107	50	U BOLT	STD132	Lisega Size 400618 Metric U-Bolt		1	0/18	
KWS-50-D16A-ROD.107/SP2-STD132	KWS-50-D16A-ROD.107	50	EXPANSION BOLT (TYPE HILTI HAS/HAS-E rod adhesive anchor M12)	STD132	HILTI DIMENISONS 12 mm dia x 110 mm long cylinder		1	0/00	
KWS-50-D16A-ROD.107/SP2-STD132	KWS-50-D16A-ROD.107	50	EXPANSION BOLT (TYPE HILTI HAS/HAS-E rod adhesive anchor M12)	STD132	HILTI DIMENISONS 12 mm dia x 110 mm long cylinder		1	0/00	
KWS-50-D16A-ROD.107/SP2-STD132	KWS-50-D16A-ROD.107	50	PLATE WITH HOLES (ACCORDING TO SUPPORT STANDARD)	STD132	10 mm Plate Steel, 230 mm x 100 mm		1	1/82	
KWS-50-D16A-ROD.107/SP3	KWS-50-D16A-ROD.107	50	U BOLT		Lisega Size 400618 Metric U-Bolt		1	0/18	
KWS-50-D16A-ROD.109/SP1-STD132	KWS-50-D16A-ROD.109	50	L70x70x7	STD132	L70x70x7, Cut Length: 541 mm	0/589	1	3/95	
KWS-50-D16A-ROD.109/SP1-STD132	KWS-50-D16A-ROD.109	50	L70x70x7	STD132	L70x70x7, Cut Length: 720 mm	0/768	1	5/26	
KWS-50-D16A-ROD.109/SP1-STD132	KWS-50-D16A-ROD.109	50	U BOLT	STD132	Lisega Size 400618 Metric U-Bolt		1	0/18	
KWS-50-D16A-ROD.109/SP1-STD132	KWS-50-D16A-ROD.109	50	EXPANSION BOLT (TYPE HILTI HAS/HAS-E rod adhesive anchor M12)	STD132	HILTI DIMENISONS 12 mm dia x 110 mm long cylinder		1	0/00	
KWS-50-D16A-ROD.109/SP1-STD132	KWS-50-D16A-ROD.109	50	EXPANSION BOLT (TYPE HILTI HAS/HAS-E rod adhesive anchor M12)	STD132	HILTI DIMENISONS 12 mm dia x 110 mm long cylinder		1	0/00	
KWS-50-D16A-ROD.109/SP1-STD132	KWS-50-D16A-ROD.109	50	PLATE WITH HOLES (ACCORDING TO SUPPORT STANDARD)	STD132	10 mm Plate Steel, 230 mm x 100 mm		1	1/82	
KWS-50-D16A-ROD.109/SP2-STD132	KWS-50-D16A-ROD.109	50	L70x70x7	STD132	L70x70x7, Cut Length: 541 mm	0/589	1	3/95	
KWS-50-D16A-ROD.109/SP2-STD132	KWS-50-D16A-ROD.109	50	L70x70x7	STD132	L70x70x7, Cut Length: 720 mm	0/768	1	5/26	
KWS-50-D16A-ROD.109/SP2-STD132	KWS-50-D16A-ROD.109	50	U BOLT	STD132	Lisega Size 400618 Metric U-Bolt		1	0/18	
KWS-50-D16A-ROD.109/SP2-STD132	KWS-50-D16A-ROD.109	50	EXPANSION BOLT (TYPE HILTI HAS/HAS-E rod adhesive anchor M12)	STD132	HILTI DIMENISONS 12 mm dia x 110 mm long cylinder		1	0/00	
KWS-50-D16A-ROD.109/SP2-STD132	KWS-50-D16A-ROD.109	50	EXPANSION BOLT (TYPE HILTI HAS/HAS-E rod adhesive anchor M12)	STD132	HILTI DIMENISONS 12 mm dia x 110 mm long cylinder		1	0/00	
KWS-50-D16A-ROD.109/SP2-STD132	KWS-50-D16A-ROD.109	50	PLATE WITH HOLES (ACCORDING TO SUPPORT STANDARD)	STD132	10 mm Plate Steel, 230 mm x 100 mm		1	1/82	
KWS-50-D16A-ROD.109/SP3	KWS-50-D16A-ROD.109	50	U BOLT		Lisega Size 400618 Metric U-Bolt		1	0/18	
KWS-50-D16A-ROD.111/SP1-STD133	KWS-50-D16A-ROD.111	50	L70x70x7	STD133	L70x70x7, Cut Length: 791 mm	0/839	1	5/78	
KWS-50-D16A-ROD.111/SP1-STD133	KWS-50-D16A-ROD.111	50	L70x70x7	STD133	L70x70x7, Cut Length: 183 mm	0/231	1	1/34	
KWS-50-D16A-ROD.111/SP1-STD133	KWS-50-D16A-ROD.111	50	L70x70x7	STD133	L70x70x7, Cut Length: 330 mm	0/378	1	2/41	
KWS-50-D16A-ROD.111/SP1-STD133	KWS-50-D16A-ROD.111	50	L70x70x7	STD133	L70x70x7, Cut Length: 183 mm	0/231	1	1/34	
KWS-50-D16A-ROD.111/SP1-STD133	KWS-50-D16A-ROD.111	50	U BOLT	STD133	Lisega Size 400618 Metric U-Bolt		1	0/18	
KWS-50-D16A-ROD.111/SP1-STD133	KWS-50-D16A-ROD.111	50	EXPANSION BOLT (TYPE HILTI HAS/HAS-E rod adhesive anchor M12)	STD133	HILTI DIMENISONS 12 mm dia x 110 mm long cylinder		1	0/00	
KWS-50-D16A-ROD.111/SP1-STD133	KWS-50-D16A-ROD.111	50	EXPANSION BOLT (TYPE HILTI HAS/HAS-E rod adhesive anchor M12)	STD133	HILTI DIMENISONS 12 mm dia x 110 mm long cylinder		1	0/00	
KWS-50-D16A-ROD.111/SP1-STD133	KWS-50-D16A-ROD.111	50	PLATE WITH HOLES (ACCORDING TO SUPPORT STANDARD)	STD133	10 mm Plate Steel, 230 mm x 100 mm		1	1/82	
KWS-50-D16A-ROD.111/SP2-STD133	KWS-50-D16A-ROD.111	50	L70x70x7	STD133	L70x70x7, Cut Length: 791 mm	0/839	1	5/78	
KWS-50-D16A-ROD.111/SP2-STD133	KWS-50-D16A-ROD.111	50	L70x70x7	STD133	L70x70x7, Cut Length: 120 mm	0/168	1	0/88	
KWS-50-D16A-ROD.111/SP2-STD133	KWS-50-D16A-ROD.111	50	L70x70x7	STD133	L70x70x7, Cut Length: 330 mm	0/378	1	2/41	
KWS-50-D16A-ROD.111/SP2-STD133	KWS-50-D16A-ROD.111	50	L70x70x7	STD133	L70x70x7, Cut Length: 120 mm	0/168	1	0/88	
KWS-50-D16A-ROD.111/SP2-STD133	KWS-50-D16A-ROD.111	50	U BOLT	STD133	Lisega Size 400618 Metric U-Bolt		1	0/18	
KWS-50-D16A-ROD.111/SP2-STD133	KWS-50-D16A-ROD.111	50	EXPANSION BOLT (TYPE HILTI HAS/HAS-E rod adhesive anchor M12)	STD133	HILTI DIMENISONS 12 mm dia x 110 mm long cylinder		1	0/00	
KWS-50-D16A-ROD.111/SP2-STD133	KWS-50-D16A-ROD.111	50	EXPANSION BOLT (TYPE HILTI HAS/HAS-E rod adhesive anchor M12)	STD133	HILTI DIMENISONS 12 mm dia x 110 mm long cylinder		1	0/00	
KWS-50-D16A-ROD.111/SP2-STD133	KWS-50-D16A-ROD.111	50	PLATE WITH HOLES (ACCORDING TO SUPPORT STANDARD)	STD133	10 mm Plate Steel, 230 mm x 100 mm		1	1/82	
KWS-50-D16A-ROD.111/SP3	KWS-50-D16A-ROD.111	50	U BOLT		Lisega Size 400618 Metric U-Bolt		1	0/18	
KWS-50-D16A-ROD.113/SP1-STD132	KWS-50-D16A-ROD.113	50	L70x70x7	STD132	L70x70x7, Cut Length: 541 mm	0/589	1	3/95	
KWS-50-D16A-ROD.113/SP1-STD132	KWS-50-D16A-ROD.113	50	L70x70x7	STD132	L70x70x7, Cut Length: 720 mm	0/768	1	5/26	
KWS-50-D16A-ROD.113/SP1-STD132	KWS-50-D16A-ROD.113	50	U BOLT	STD132	Lisega Size 400618 Metric U-Bolt		1	0/18	

SUPPORT TAG	PIPE TAG	DN	TYPE OF ELEMENT	STD	DESCRIPTION	LENGTH (M)	QUANT.	WEIGHT	PRICE
KWS-50-D16A-ROD.113/SP1-STD132	KWS-50-D16A-ROD.113	50	EXPANSION BOLT (TYPE HILTI HAS/HAS-E rod adhesive anchor M12)	STD132	HILTI DIMENISONS 12 mm dia x 110 mm long cylinder		1	0/00	
KWS-50-D16A-ROD.113/SP1-STD132	KWS-50-D16A-ROD.113	50	EXPANSION BOLT (TYPE HILTI HAS/HAS-E rod adhesive anchor M12)	STD132	HILTI DIMENISONS 12 mm dia x 110 mm long cylinder		1	0/00	
KWS-50-D16A-ROD.113/SP1-STD132	KWS-50-D16A-ROD.113	50	PLATE WITH HOLES (ACCORDING TO SUPPORT STANDARD)	STD132	10 mm Plate Steel, 230 mm x 100 mm		1	1/82	
KWS-50-D16A-ROD.113/SP2-STD132	KWS-50-D16A-ROD.113	50	L70x70x7	STD132	L70x70x7, Cut Length: 541 mm	0/589	1	3/95	
KWS-50-D16A-ROD.113/SP2-STD132	KWS-50-D16A-ROD.113	50	L70x70x7	STD132	L70x70x7, Cut Length: 720 mm	0/768	1	5/26	
KWS-50-D16A-ROD.113/SP2-STD132	KWS-50-D16A-ROD.113	50	U BOLT	STD132	Lisega Size 400618 Metric U-Bolt		1	0/18	
KWS-50-D16A-ROD.113/SP2-STD132	KWS-50-D16A-ROD.113	50	EXPANSION BOLT (TYPE HILTI HAS/HAS-E rod adhesive anchor M12)	STD132	HILTI DIMENISONS 12 mm dia x 110 mm long cylinder		1	0/00	
KWS-50-D16A-ROD.113/SP2-STD132	KWS-50-D16A-ROD.113	50	EXPANSION BOLT (TYPE HILTI HAS/HAS-E rod adhesive anchor M12)	STD132	HILTI DIMENISONS 12 mm dia x 110 mm long cylinder		1	0/00	
KWS-50-D16A-ROD.113/SP2-STD132	KWS-50-D16A-ROD.113	50	PLATE WITH HOLES (ACCORDING TO SUPPORT STANDARD)	STD132	10 mm Plate Steel, 230 mm x 100 mm		1	1/82	
KWS-50-D16A-ROD.113/SP3	KWS-50-D16A-ROD.113	50	U BOLT		Lisega Size 400618 Metric U-Bolt		1	0/18	
KWS-50-D16A-ROD.114/SP1	KWS-50-D16A-ROD.114	50	U BOLT		Lisega Size 400618 Metric U-Bolt		1	0/18	
KWS-50-D16A-ROD.115/SP1	KWS-50-D16A-ROD.115	50	U BOLT		Lisega Size 400618 Metric U-Bolt		1	0/18	
KWS-50-D16A-ROD.116/SP1	KWS-50-D16A-ROD.116	50	U BOLT		Lisega Size 400618 Metric U-Bolt		1	0/18	
KWS-50-D16A-ROD.117/SP1	KWS-50-D16A-ROD.117	50	U BOLT		Lisega Size 400618 Metric U-Bolt		1	0/18	
KWS-50-D16A-ROD.118/SP1	KWS-50-D16A-ROD.118	50	U BOLT		Lisega Size 400618 Metric U-Bolt		1	0/18	

VALVES AIR

PIPE TAG	FLUID	SPECIFICATION (Doc. Nº00001ESP70001-ANNEX 2)	TYPE	DN	UNITS	DN	UNITS	NORMATIVE	MATERIAL	QUANT.	HEIGHT	PRICE
CA-15-D16A-ROD.71	CA	D16ABA01	BALL VALVE OF FORGED STEEL , PN16, THD, ASTM-A105, BS5351 WITH DIN 2999/1 END CONNECTIONS	15	MM	15	MM	BS5351 WITH DIN 2999/1	ASTM-A105	1	1/3	
CA-15-D16A-ROD.74	CA	D16ABA01	BALL VALVE OF FORGED STEEL , PN16, THD, ASTM-A105, BS5351 WITH DIN 2999/1 END CONNECTIONS	15	MM	15	MM	BS5351 WITH DIN 2999/1	ASTM-A105	1	1/3	
CA-15-D16A-ROD.76	CA	D16ABA01	BALL VALVE OF FORGED STEEL , PN16, THD, ASTM-A105, BS5351 WITH DIN 2999/1 END CONNECTIONS	15	MM	15	MM	BS5351 WITH DIN 2999/1	ASTM-A105	1	1/3	
CA-15-D16A-ROD.85	CA	D16ABA01	BALL VALVE OF FORGED STEEL , PN16, THD, ASTM-A105, BS5351 WITH DIN 2999/1 END CONNECTIONS	15	MM	15	MM	BS5351 WITH DIN 2999/1	ASTM-A105	1	1/3	
CA-15-D16A-ROD.86	CA	D16ABA01	BALL VALVE OF FORGED STEEL , PN16, THD, ASTM-A105, BS5351 WITH DIN 2999/1 END CONNECTIONS	15	MM	15	MM	BS5351 WITH DIN 2999/1	ASTM-A105	1	1/3	
CA-15-D16A-ROD.87	CA	D16ABA01	BALL VALVE OF FORGED STEEL , PN16, THD, ASTM-A105, BS5351 WITH DIN 2999/1 END CONNECTIONS	15	MM	15	MM	BS5351 WITH DIN 2999/1	ASTM-A105	1	1/3	
CA-20-D16A-ROD.70	CA	D16ABA01	BALL VALVE OF FORGED STEEL , PN16, THD, ASTM-A105, BS5351 WITH DIN 2999/1 END CONNECTIONS	20	MM	20	MM	BS5351 WITH DIN 2999/1	ASTM-A105	1	2/3	
CA-20-D16A-ROD.72	CA	D16ABA01	BALL VALVE OF FORGED STEEL , PN16, THD, ASTM-A105, BS5351 WITH DIN 2999/1 END CONNECTIONS	20	MM	20	MM	BS5351 WITH DIN 2999/1	ASTM-A105	1	2/3	
CA-20-D16A-ROD.78	CA	D16ABA01	BALL VALVE OF FORGED STEEL , PN16, THD, ASTM-A105, BS5351 WITH DIN 2999/1 END CONNECTIONS	20	MM	20	MM	BS5351 WITH DIN 2999/1	ASTM-A105	1	2/3	
CA-25-D16A-ROD.60	CA	D16ABA01	BALL VALVE OF FORGED STEEL , PN16, THD, ASTM-A105, BS5351 WITH DIN 2999/1 END CONNECTIONS	25	MM	25	MM	BS5351 WITH DIN 2999/1	ASTM-A105	1	3/2	
CA-25-D16A-ROD.75	CA	D16ABA01	BALL VALVE OF FORGED STEEL , PN16, THD, ASTM-A105, BS5351 WITH DIN 2999/1 END CONNECTIONS	25	MM	25	MM	BS5351 WITH DIN 2999/1	ASTM-A105	1	3/2	
CA-25-D16A-ROD.77	CA	D16ABA01	BALL VALVE OF FORGED STEEL , PN16, THD, ASTM-A105, BS5351 WITH DIN 2999/1 END CONNECTIONS	25	MM	25	MM	BS5351 WITH DIN 2999/1	ASTM-A105	1	3/2	
CA-32-D16A-ROD.73	CA	D16ABA01	BALL VALVE OF FORGED STEEL , PN16, THD, ASTM-A105, BS5351 WITH DIN 2999/1 END CONNECTIONS	32	MM	32	MM	BS5351 WITH DIN 2999/1	ASTM-A105	1	4/3	
CA-32-D16A-ROD.82	CA	D16ABA01	BALL VALVE OF FORGED STEEL , PN16, THD, ASTM-A105, BS5351 WITH DIN 2999/1 END CONNECTIONS	32	MM	32	MM	BS5351 WITH DIN 2999/1	ASTM-A105	1	4/3	
CA-40-D16A-ROD.62	CA	D16ABA01	BALL VALVE OF FORGED STEEL , PN16, THD, ASTM-A105, BS5351 WITH DIN 2999/1 END CONNECTIONS	40	MM	40	MM	BS5351 WITH DIN 2999/1	ASTM-A105	1	5/8	
CA-40-D16A-ROD.84	CA	D16ABA01	BALL VALVE OF FORGED STEEL , PN16, THD, ASTM-A105, BS5351 WITH DIN 2999/1 END CONNECTIONS	40	MM	40	MM	BS5351 WITH DIN 2999/1	ASTM-A105	1	5/8	
CA-50-D16A-ROD.30	CA	D16ABA01	BALL VALVE OF FORGED STEEL , PN16, THD, ASTM-A105, BS5351 WITH DIN 2999/1 END CONNECTIONS	50	MM	50	MM	BS5351 WITH DIN 2999/1	ASTM-A105	1	12	
CA-50-D16A-ROD.30	CA	D16ABA01	BALL VALVE OF FORGED STEEL , PN16, THD, ASTM-A105, BS5351 WITH DIN 2999/1 END CONNECTIONS	50	MM	50	MM	BS5351 WITH DIN 2999/1	ASTM-A105	1	12	
CA-50-D16A-ROD.63	CA	D16ABA01	BALL VALVE OF FORGED STEEL , PN16, THD, ASTM-A105, BS5351 WITH DIN 2999/1 END CONNECTIONS	50	MM	50	MM	BS5351 WITH DIN 2999/1	ASTM-A105	1	12	
CA-65-D16A-ROD.80	CA	D16ABF01	BUTTERFLY WAFER VALVE OF CARBON STEEL , PN 16 DIN EN 1092-1, NODULAR CAST IRON GGG 50, EN 558 Serie 20 (DIN 3202 part 3, K1 serie)	65	MM	65	MM	EN 558 Serie 20 (DIN 3202 part 3, K1 serie)	NODULAR CAST IRON GGG 50	1	5,6	
CA-20-D16A-ROD.99	CA	D16ABA01	BALL VALVE OF FORGED STEEL , PN16, THD, ASTM-A105, BS5351 WITH DIN 2999/1 END CONNECTIONS	20	MM	20	MM	BS5351 WITH DIN 2999/1	ASTM-A105	1	3/2	
CA-20-D16A-ROD.100	CA	D16ABA01	BALL VALVE OF FORGED STEEL , PN16, THD, ASTM-A105, BS5351 WITH DIN 2999/1 END CONNECTIONS	20	MM	20	MM	BS5351 WITH DIN 2999/1	ASTM-A105	1	3/2	
CA-50-D16A-ROD.89	CA	D16ABA01	BALL VALVE OF FORGED STEEL , PN16, THD, ASTM-A105, BS5351 WITH DIN 2999/1 END CONNECTIONS	20	MM	20	MM	BS5351 WITH DIN 2999/1	ASTM-A105	1	3/2	
CA-50-D16A-ROD.89	CA	D16ABA01	BALL VALVE OF FORGED STEEL , PN16, THD, ASTM-A105, BS5351 WITH DIN 2999/1 END CONNECTIONS	20	MM	20	MM	BS5351 WITH DIN 2999/1	ASTM-A105	1	3/2	
CA-50-D16A-ROD.89	CA	D16ABA01	BALL VALVE OF FORGED STEEL , PN16, THD, ASTM-A105, BS5351 WITH DIN 2999/1 END CONNECTIONS	20	MM	20	MM	BS5351 WITH DIN 2999/1	ASTM-A105	1	3/2	
CA-50-D16A-ROD.89	CA	D16ABA01	BALL VALVE OF FORGED STEEL , PN16, THD, ASTM-A105, BS5351 WITH DIN 2999/1 END CONNECTIONS	20	MM	20	MM	BS5351 WITH DIN 2999/1	ASTM-A105	1	3/2	
CA-50-D16A-ROD.89	CA	D16ABA01	BALL VALVE OF FORGED STEEL , PN16, THD, ASTM-A105, BS5351 WITH DIN 2999/1 END CONNECTIONS	20	MM	20	MM	BS5351 WITH DIN 2999/1	ASTM-A105	1	3/2	
CA-50-D16A-ROD.89	CA	D16ABA01	BALL VALVE OF FORGED STEEL , PN16, THD, ASTM-A105, BS5351 WITH DIN 2999/1 END CONNECTIONS	32	MM	32	MM	BS5351 WITH DIN 2999/1	ASTM-A105	1	4/3	
CA-20-D16A-ROD.91	CA	D16ABA01	BALL VALVE OF FORGED STEEL , PN16, THD, ASTM-A105, BS5351 WITH DIN 2999/1 END CONNECTIONS	20	MM	20	MM	BS5351 WITH DIN 2999/1	ASTM-A105	1	3/2	
CA-32-D16A-ROD.90	CA	D16ABA01	BALL VALVE OF FORGED STEEL , PN16, THD, ASTM-A105, BS5351 WITH DIN 2999/1 END CONNECTIONS	32	MM	32	MM	BS5351 WITH DIN 2999/1	ASTM-A105	1	4/3	
CA-65-D16A-ROD.98	CA	D16ABA01	BALL VALVE OF FORGED STEEL , PN16, THD, ASTM-A105, BS5351 WITH DIN 2999/1 END CONNECTIONS	20	MM	20	MM	BS5351 WITH DIN 2999/1	ASTM-A105	1	3/2	
CA-65-D16A-ROD.98	CA	D16ABA01	BALL VALVE OF FORGED STEEL , PN16, THD, ASTM-A105, BS5351 WITH DIN 2999/1 END CONNECTIONS	20	MM	20	MM	BS5351 WITH DIN 2999/1	ASTM-A105	1	3/2	
CA-65-D16A-ROD.98	CA	D16ABA01	BALL VALVE OF FORGED STEEL , PN16, THD, ASTM-A105, BS5351 WITH DIN 2999/1 END CONNECTIONS	20	MM	20	MM	BS5351 WITH DIN 2999/1	ASTM-A105	1	3/2	
CA-65-D16A-ROD.98	CA	D16ABA01	BALL VALVE OF FORGED STEEL , PN16, THD, ASTM-A105, BS5351 WITH DIN 2999/1 END CONNECTIONS	20	MM	20	MM	BS5351 WITH DIN 2999/1	ASTM-A105	1	3/2	
CA-65-D16A-ROD.98	CA	D16ABA01	BALL VALVE OF FORGED STEEL , PN16, THD, ASTM-A105, BS5351 WITH DIN 2999/1 END CONNECTIONS	20	MM	20	MM	BS5351 WITH DIN 2999/1	ASTM-A105	1	3/2	
CA-65-D16A-ROD.98	CA	D16ABA01	BALL VALVE OF FORGED STEEL , PN16, THD, ASTM-A105, BS5351 WITH DIN 2999/1 END CONNECTIONS	20	MM	20	MM	BS5351 WITH DIN 2999/1	ASTM-A105	1	3/2	
CA-65-D16A-ROD.79	CA	D16ABA02	BALL VALVE OF CARBON STEEL, PN16/40, RFFE, GP240GH (A216WCB), DIN 3357 WITH EN 1092 END CONNECTIONS	65	MM	65	MM	DIN 3202 F18 (EN 558 SERIE 27)	EN-GJL-250 (Grey Cast Iron)	1	13/5	

ACCESORIES AIR

PIPE TAG	FLUID	SPECI.	TYPE	DN	UNITS	DN	UNITS	NORMATIVE	MATERIAL	QUANT.	HEIGHT	PRICE
CA-15-D16A-ROD.71	CA	D16A	SOCKOLET, CL3000, SW, ASTM-A105, ASME B16.11	25	mm	15	mm	ASME B16.11	ASTM-A105	1	0/14	
CA-15-D16A-ROD.74	CA	D16A	SOCKOLET, CL3000, SW, ASTM-A105, ASME B16.11	50	mm	15	mm	ASME B16.11	ASTM-A105	1	0/14	
CA-15-D16A-ROD.76	CA	D16A	SOCKOLET, CL3000, SW, ASTM-A105, ASME B16.11	50	mm	15	mm	ASME B16.11	ASTM-A105	1	0/14	
CA-15-D16A-ROD.85	CA	D16A	SOCKOLET, CL3000, SW, ASTM-A105, ASME B16.11	40	mm	15	mm	ASME B16.11	ASTM-A105	1	0/14	
CA-15-D16A-ROD.86	CA	D16A	SOCKOLET, CL3000, SW, ASTM-A105, ASME B16.11	40	mm	15	mm	ASME B16.11	ASTM-A105	1	0/14	
CA-15-D16A-ROD.87	CA	D16A	SOCKOLET, CL3000, SW, ASTM-A105, ASME B16.11	40	mm	15	mm	ASME B16.11	ASTM-A105	1	0/14	
CA-15-D16A-ROD.88	CA	D16A	90 DEG ELBOW, CL 3000, SW, ASTM A105, ASME B16.11	15	mm	15	mm	ASME B16.11	ASTM A105	1	0/25	
CA-15-D16A-ROD.88	CA	D16A	90 DEG ELBOW, CL 3000, SW, ASTM A105, ASME B16.11	25	mm	25	mm	ASME B16.11	ASTM A105	1	0/52	
CA-15-D16A-ROD.88	CA	D16A	CONCENTRIC REDUCER, CL3000, SW, ASTM-A105, ASME B16.11	25	mm	15	mm	ASME B16.11	ASTM-A105	1	0/13	
CA-15-D16A-ROD.88	CA	D16A	90 DEG ELBOW, CL 3000, SW, ASTM A105, ASME B16.11	25	mm	25	mm	ASME B16.11	ASTM A105	1	0/52	
CA-20-D16A-ROD.78	CA	D16A	SOCKOLET, CL3000, SW, ASTM-A105, ASME B16.11	50	mm	20	mm	ASME B16.11	ASTM-A105	1	0/15	
CA-25-D16A-ROD.60	CA	D16A	90 DEG ELBOW, CL 3000, SW, ASTM A105, ASME B16.11	25	mm	25	mm	ASME B16.11	ASTM A105	1	0/52	
CA-25-D16A-ROD.60	CA	D16A	90 DEG ELBOW, CL 3000, SW, ASTM A105, ASME B16.11	25	mm	25	mm	ASME B16.11	ASTM A105	1	0/52	
CA-25-D16A-ROD.60	CA	D16A	90 DEG ELBOW, CL 3000, SW, ASTM A105, ASME B16.11	25	mm	25	mm	ASME B16.11	ASTM A105	1	0/52	
CA-25-D16A-ROD.60	CA	D16A	90 DEG ELBOW, CL 3000, SW, ASTM A105, ASME B16.11	25	mm	25	mm	ASME B16.11	ASTM A105	1	0/52	
CA-25-D16A-ROD.60	CA	D16A	90 DEG ELBOW, CL 3000, SW, ASTM A105, ASME B16.11	25	mm	25	mm	ASME B16.11	ASTM A105	1	0/52	
CA-25-D16A-ROD.60	CA	D16A	90 DEG ELBOW, CL 3000, SW, ASTM A105, ASME B16.11	25	mm	25	mm	ASME B16.11	ASTM A105	1	0/52	
CA-25-D16A-ROD.60	CA	D16A	SOCKOLET, CL3000, SW, ASTM-A105, ASME B16.11	150	mm	25	mm	ASME B16.11	ASTM-A105	1	0/27	
CA-25-D16A-ROD.60	CA	D16A	CAP, CL3000, SW, ASTM-A105, ASME B16.11	25	mm	0	mm	ASME B16.11	ASTM-A105	1	0/09	
CA-25-D16A-ROD.60	CA	D16A	REDUCING BRANCH TEE, CL3000, SW, ASTM-A105, ASME B16.11	25	mm	20	mm	ASME B16.11	ASTM-A105	1	0/65	
CA-25-D16A-ROD.60	CA	D16A	REDUCING BRANCH TEE, CL3000, SW, ASTM-A105, ASME B16.11	25	mm	20	mm	ASME B16.11	ASTM-A105	1	0/65	
CA-25-D16A-ROD.60	CA	D16A	90 DEG ELBOW, CL 3000, SW, ASTM A105, ASME B16.11	25	mm	25	mm	ASME B16.11	ASTM A105	1	0/52	
CA-25-D16A-ROD.60	CA	D16A	90 DEG ELBOW, CL 3000, SW, ASTM A105, ASME B16.11	25	mm	25	mm	ASME B16.11	ASTM A105	1	0/52	
CA-25-D16A-ROD.68	CA	D16A	90 DEG ELBOW, CL 3000, SW, ASTM A105, ASME B16.11	25	mm	25	mm	ASME B16.11	ASTM A105	1	0/52	
CA-25-D16A-ROD.68	CA	D16A	90 DEG ELBOW, CL 3000, SW, ASTM A105, ASME B16.11	25	mm	25	mm	ASME B16.11	ASTM A105	1	0/52	
CA-25-D16A-ROD.68	CA	D16A	90 DEG ELBOW, CL 3000, SW, ASTM A105, ASME B16.11	25	mm	25	mm	ASME B16.11	ASTM A105	1	0/52	
CA-25-D16A-ROD.68	CA	D16A	90 DEG ELBOW, CL 3000, SW, ASTM A105, ASME B16.11	25	mm	25	mm	ASME B16.11	ASTM A105	1	0/52	
CA-25-D16A-ROD.68	CA	D16A	90 DEG ELBOW, CL 3000, SW, ASTM A105, ASME B16.11	25	mm	25	mm	ASME B16.11	ASTM A105	1	0/52	
CA-25-D16A-ROD.68	CA	D16A	90 DEG ELBOW, CL 3000, SW, ASTM A105, ASME B16.11	25	mm	25	mm	ASME B16.11	ASTM A105	1	0/52	
CA-25-D16A-ROD.68	CA	D16A	90 DEG ELBOW, CL 3000, SW, ASTM A105, ASME B16.11	25	mm	25	mm	ASME B16.11	ASTM A105	1	0/52	
CA-25-D16A-ROD.68	CA	D16A	SOCKOLET, CL3000, SW, ASTM-A105, ASME B16.11	150	mm	25	mm	ASME B16.11	ASTM-A105	1	0/27	
CA-25-D16A-ROD.68	CA	D16A	UNION NUT, CL3000, SW, ASTM-A105, ASME B16.11	25	mm	25	mm	ASME B16.11	ASTM-A105	1	0/66	
CA-25-D16A-ROD.68	CA	D16A	90 DEG ELBOW, CL 3000, SW, ASTM A105, ASME B16.11	25	mm	25	mm	ASME B16.11	ASTM A105	1	0/52	
CA-25-D16A-ROD.68	CA	D16A	90 DEG ELBOW, CL 3000, SW, ASTM A105, ASME B16.11	25	mm	25	mm	ASME B16.11	ASTM A105	1	0/52	
CA-25-D16A-ROD.68	CA	D16A	90 DEG ELBOW, CL 3000, SW, ASTM A105, ASME B16.11	25	mm	25	mm	ASME B16.11	ASTM A105	1	0/52	
CA-25-D16A-ROD.68	CA	D16A	90 DEG ELBOW, CL 3000, SW, ASTM A105, ASME B16.11	25	mm	25	mm	ASME B16.11	ASTM A105	1	0/52	
CA-25-D16A-ROD.68	CA	D16A	90 DEG ELBOW, CL 3000, SW, ASTM A105, ASME B16.11	25	mm	25	mm	ASME B16.11	ASTM A105	1	0/52	
CA-25-D16A-ROD.69	CA	D16A	90 DEG ELBOW, CL 3000, SW, ASTM A105, ASME B16.11	25	mm	25	mm	ASME B16.11	ASTM A105	1	0/52	
CA-25-D16A-ROD.69	CA	D16A	90 DEG ELBOW, CL 3000, SW, ASTM A105, ASME B16.11	25	mm	25	mm	ASME B16.11	ASTM A105	1	0/52	
CA-25-D16A-ROD.69	CA	D16A	90 DEG ELBOW, CL 3000, SW, ASTM A105, ASME B16.11	25	mm	25	mm	ASME B16.11	ASTM A105	1	0/52	
CA-25-D16A-ROD.69	CA	D16A	90 DEG ELBOW, CL 3000, SW, ASTM A105, ASME B16.11	25	mm	25	mm	ASME B16.11	ASTM A105	1	0/52	
CA-25-D16A-ROD.69	CA	D16A	TEE, CL 3000, SW, ASTM-A105, ASME B16.11	25	mm	25	mm	ASME B16.11	ASTM-A105	1	0/61	
CA-25-D16A-ROD.69	CA	D16A	TEE, CL 3000, SW, ASTM-A105, ASME B16.11	25	mm	25	mm	ASME B16.11	ASTM-A105	1	0/61	
CA-25-D16A-ROD.69	CA	D16A	90 DEG ELBOW, CL 3000, SW, ASTM A105, ASME B16.11	25	mm	25	mm	ASME B16.11	ASTM A105	1	0/52	
CA-25-D16A-ROD.69	CA	D16A	SOCKOLET, CL3000, SW, ASTM-A105, ASME B16.11	150	mm	25	mm	ASME B16.11	ASTM-A105	1	0/27	
CA-25-D16A-ROD.69	CA	D16A	45 DEG ELBOW, CL 3000, SW, ASTM A105, ASME B16.11	25	mm	25	mm	ASME B16.11	ASTM A105	1	0/38	
CA-25-D16A-ROD.75	CA	D16A	SOCKOLET, CL3000, SW, ASTM-A105, ASME B16.11	65	mm	25	mm	ASME B16.11	ASTM-A105	1	0/27	
CA-25-D16A-ROD.77	CA	D16A	90 DEG ELBOW, CL 3000, SW, ASTM A105, ASME B16.11	25	mm	25	mm	ASME B16.11	ASTM A105	1	0/52	
CA-25-D16A-ROD.77	CA	D16A	90 DEG ELBOW, CL 3000, SW, ASTM A105, ASME B16.11	25	mm	25	mm	ASME B16.11	ASTM A105	1	0/52	
CA-25-D16A-ROD.83	CA	D16A	90 DEG ELBOW, CL 3000, SW, ASTM A105, ASME B16.11	25	mm	25	mm	ASME B16.11	ASTM A105	1	0/52	
CA-25-D16A-ROD.83	CA	D16A	90 DEG ELBOW, CL 3000, SW, ASTM A105, ASME B16.11	25	mm	25	mm	ASME B16.11	ASTM A105	1	0/52	
CA-25-D16A-ROD.83	CA	D16A	90 DEG ELBOW, CL 3000, SW, ASTM A105, ASME B16.11	25	mm	25	mm	ASME B16.11	ASTM A105	1	0/52	
CA-25-D16A-ROD.83	CA	D16A	90 DEG ELBOW, CL 3000, SW, ASTM A105, ASME B16.11	25	mm	25	mm	ASME B16.11	ASTM A105	1	0/52	
CA-25-D16A-ROD.83	CA	D16A	90 DEG ELBOW, CL 3000, SW, ASTM A105, ASME B16.11	25	mm	25	mm	ASME B16.11	ASTM A105	1	0/52	
CA-25-D16A-ROD.83	CA	D16A	90 DEG ELBOW, CL 3000, SW, ASTM A105, ASME B16.11	25	mm	25	mm	ASME B16.11	ASTM A105	1	0/52	
CA-25-D16A-ROD.83	CA	D16A	CONCENTRIC REDUCER, CL3000, SW, ASTM-A105, ASME B16.11	40	mm	25	mm	ASME B16.11	ASTM-A105	1	0/26	
CA-25-D16A-ROD.83	CA	D16A	90 DEG ELBOW, CL 3000, SW, ASTM A105, ASME B16.11	25	mm	25	mm	ASME B16.11	ASTM A105	1	0/52	
CA-25-D16A-ROD.83	CA	D16A	90 DEG ELBOW, CL 3000, SW, ASTM A105, ASME B16.11	25	mm	25	mm	ASME B16.11	ASTM A105	1	0/52	
CA-25-D16A-ROD.83	CA	D16A	90 DEG ELBOW, CL 3000, SW, ASTM A105, ASME B16.11	25	mm	25	mm	ASME B16.11	ASTM A105	1	0/52	
CA-32-D16A-ROD.81	CA	D16A	90 DEG ELBOW, CL 3000, SW, ASTM A105, ASME B16.11	32	mm	32	mm	ASME B16.11	ASTM A105	1	0/86	
CA-32-D16A-ROD.81	CA	D16A	90 DEG ELBOW, CL 3000, SW, ASTM A105, ASME B16.11	32	mm	32	mm	ASME B16.11	ASTM A105	1	0/86	
CA-32-D16A-ROD.81	CA	D16A	90 DEG ELBOW, CL 3000, SW, ASTM A105, ASME B16.11	32	mm	32	mm	ASME B16.11	ASTM A105	1	0/86	
CA-32-D16A-ROD.81	CA	D16A	90 DEG ELBOW, CL 3000, SW, ASTM A105, ASME B16.11	32	mm	32	mm	ASME B16.11	ASTM A105	1	0/86	
CA-32-D16A-ROD.81	CA	D16A	90 DEG ELBOW, CL 3000, SW, ASTM A105, ASME B16.11	32	mm	32	mm	ASME B16.11	ASTM A105	1	0/86	

PIPE TAG	FLUID	SPECI.	TYPE	DN	UNITS	DN	UNITS	NORMATIVE	MATERIAL	QUANT.	HEIGHT	PRICE
CA-32-D16A-ROD.81	CA	D16A	90 DEG ELBOW, CL 3000, SW, ASTM A105, ASME B16.11	32	mm	32	mm	ASME B16.11	ASTM A105	1	0/86	
CA-32-D16A-ROD.81	CA	D16A	CONCENTRIC REDUCER, CL3000, SW, ASTM-A105, ASME B16.11	32	mm	25	mm	ASME B16.11	ASTM-A105	1	0/17	
CA-32-D16A-ROD.81	CA	D16A	UNION NUT, CL3000, SW, ASTM-A105, ASME B16.11	32	mm	32	mm	ASME B16.11	ASTM-A105	1	1/15	
CA-32-D16A-ROD.81	CA	D16A	90 DEG ELBOW, CL 3000, SW, ASTM A105, ASME B16.11	32	mm	32	mm	ASME B16.11	ASTM A105	1	0/86	
CA-32-D16A-ROD.82	CA	D16A	90 DEG ELBOW, CL 3000, SW, ASTM A105, ASME B16.11	32	mm	32	mm	ASME B16.11	ASTM A105	1	0/86	
CA-32-D16A-ROD.82	CA	D16A	CONCENTRIC REDUCER, CL3000, SW, ASTM-A105, ASME B16.11	40	mm	32	mm	ASME B16.11	ASTM-A105	1	0/26	
CA-40-D16A-ROD.62	CA	D16A	90 DEG ELBOW, CL 3000, SW, ASTM A105, ASME B16.11	40	mm	40	mm	ASME B16.11	ASTM A105	1	1/09	
CA-40-D16A-ROD.62	CA	D16A	TEE, CL 3000, SW, ASTM-A105, ASME B16.11	40	mm	40	mm	ASME B16.11	ASTM-A105	1	1/24	
CA-40-D16A-ROD.62	CA	D16A	90 DEG ELBOW, CL 3000, SW, ASTM A105, ASME B16.11	40	mm	40	mm	ASME B16.11	ASTM A105	1	1/09	
CA-40-D16A-ROD.62	CA	D16A	CAP, CL3000, SW, ASTM-A105, ASME B16.11	40	mm	0	mm	ASME B16.11	ASTM-A105	1	0/2	
CA-40-D16A-ROD.62	CA	D16A	90 DEG ELBOW, CL 3000, SW, ASTM A105, ASME B16.11	40	mm	40	mm	ASME B16.11	ASTM A105	1	1/09	
CA-40-D16A-ROD.62	CA	D16A	SOCKOLET, CL3000, SW, ASTM-A105, ASME B16.11	150	mm	40	mm	ASME B16.11	ASTM-A105	1	0/47	
CA-40-D16A-ROD.84	CA	D16A	90 DEG ELBOW, CL 3000, SW, ASTM A105, ASME B16.11	40	mm	40	mm	ASME B16.11	ASTM A105	1	1/09	
CA-40-D16A-ROD.84	CA	D16A	90 DEG ELBOW, CL 3000, SW, ASTM A105, ASME B16.11	40	mm	40	mm	ASME B16.11	ASTM A105	1	1/09	
CA-50-D16A-ROD.30	CA	D16A	90 DEG ELBOW, CL 3000, SW, ASTM A105, ASME B16.11	50	mm	50	mm	ASME B16.11	ASTM A105	1	1/77	
CA-50-D16A-ROD.30	CA	D16A	90 DEG ELBOW, CL 3000, SW, ASTM A105, ASME B16.11	50	mm	50	mm	ASME B16.11	ASTM A105	1	1/77	
CA-50-D16A-ROD.30	CA	D16A	90 DEG ELBOW, CL 3000, SW, ASTM A105, ASME B16.11	50	mm	50	mm	ASME B16.11	ASTM A105	1	1/77	
CA-50-D16A-ROD.30	CA	D16A	90 DEG ELBOW, CL 3000, SW, ASTM A105, ASME B16.11	50	mm	50	mm	ASME B16.11	ASTM A105	1	1/77	
CA-50-D16A-ROD.30	CA	D16A	REDUCING BRANCH TEE, CL3000, SW, ASTM-A105, ASME B16.11	50	mm	32	mm	ASME B16.11	ASTM-A105	1	0/99	
CA-50-D16A-ROD.30	CA	D16A	90 DEG ELBOW, CL 3000, SW, ASTM A105, ASME B16.11	50	mm	50	mm	ASME B16.11	ASTM A105	1	1/77	
CA-50-D16A-ROD.30	CA	D16A	90 DEG ELBOW, CL 3000, SW, ASTM A105, ASME B16.11	50	mm	50	mm	ASME B16.11	ASTM A105	1	1/77	
CA-50-D16A-ROD.63	CA	D16A	CONCENTRIC REDUCER, CL3000, SW, ASTM-A105, ASME B16.11	50	mm	40	mm	ASME B16.11	ASTM-A105	1	0/41	
CA-50-D16A-ROD.63	CA	D16A	90 DEG ELBOW, CL 3000, SW, ASTM A105, ASME B16.11	40	mm	40	mm	ASME B16.11	ASTM A105	1	1/09	
CA-50-D16A-ROD.63	CA	D16A	90 DEG ELBOW, CL 3000, SW, ASTM A105, ASME B16.11	40	mm	40	mm	ASME B16.11	ASTM A105	1	1/09	
CA-50-D16A-ROD.63	CA	D16A	90 DEG ELBOW, CL 3000, SW, ASTM A105, ASME B16.11	40	mm	40	mm	ASME B16.11	ASTM A105	1	1/09	
CA-50-D16A-ROD.63	CA	D16A	90 DEG ELBOW, CL 3000, SW, ASTM A105, ASME B16.11	40	mm	40	mm	ASME B16.11	ASTM A105	1	1/09	
CA-50-D16A-ROD.63	CA	D16A	90 DEG ELBOW, CL 3000, SW, ASTM A105, ASME B16.11	40	mm	40	mm	ASME B16.11	ASTM A105	1	1/09	
CA-50-D16A-ROD.63	CA	D16A	TEE, CL 3000, SW, ASTM-A105, ASME B16.11	40	mm	40	mm	ASME B16.11	ASTM-A105	1	1/24	
CA-65-D16A-ROD.79	CA	D16A	90 DEG ELBOW, 3D, BW, P235GH/1.0305/A106, DIN EN 10253-1	65	mm	65	mm	DIN EN 10253-1	P235GH/1.0305/A106	1	0/79	
CA-65-D16A-ROD.79	CA	D16A	90 DEG ELBOW, 3D, BW, P235GH/1.0305/A106, DIN EN 10253-1	65	mm	65	mm	DIN EN 10253-1	P235GH/1.0305/A106	1	0/79	
CA-65-D16A-ROD.79	CA	D16A	45 DEG ELBOW, 3D, BW, P235GH/1.0305/A106, DIN EN 10253-1	65	mm	65	mm	DIN EN 10253-1	P235GH/1.0305/A106	1	0,39	
CA-65-D16A-ROD.79	CA	D16A	90 DEG ELBOW, 3D, BW, P235GH/1.0305/A106, DIN EN 10253-1	65	mm	65	mm	DIN EN 10253-1	P235GH/1.0305/A106	1	0/79	
CA-65-D16A-ROD.79	CA	D16A	90 DEG ELBOW, 3D, BW, P235GH/1.0305/A106, DIN EN 10253-1	65	mm	65	mm	DIN EN 10253-1	P235GH/1.0305/A106	1	0/79	
CA-65-D16A-ROD.79	CA	D16A	90 DEG ELBOW, 3D, BW, P235GH/1.0305/A106, DIN EN 10253-1	65	mm	65	mm	DIN EN 10253-1	P235GH/1.0305/A106	1	0/79	
CA-65-D16A-ROD.79	CA	D16A	CAP, DIN 1, BW, P235GH/1.0305/A106, DIN EN 10253-1	65	mm	0	mm	DIN EN 10253-1	P235GH/1.0305/A106	1	0/34	
CA-65-D16A-ROD.79	CA	D16A	TEE,BW, P235GH/1.0305/A106, DIN EN 10253-1	65	mm	65	mm	DIN EN 10253-1	P235GH/1.0305/A106	1	2,37	
CA-65-D16A-ROD.79	CA	D16A	90 DEG ELBOW, 3D, BW, P235GH/1.0305/A106, DIN EN 10253-1	65	mm	65	mm	DIN EN 10253-1	P235GH/1.0305/A106	1	0/79	
CA-65-D16A-ROD.79	CA	D16A	REDUCING BRANCH TEE, DIN 1 x DIN 1, BW, P235GH/1.0305/A106, DIN EN 10253-1	65	mm	32	mm	DIN EN 10253-1	P235GH/1.0305/A106	1	1/68	
CA-65-D16A-ROD.80	CA	D16A	90 DEG ELBOW, 3D, BW, P235GH/1.0305/A106, DIN EN 10253-1	65	mm	65	mm	DIN EN 10253-1	P235GH/1.0305/A106	1	0/79	
CA-65-D16A-ROD.80	CA	D16A	WELDING NECK FLANGE, DIN 1, RFFE/WN, PN 16, S235JRG2/1,0432/A105, DIN EN 1092-1	65	mm	65	mm	DIN EN 1092-1	S235JRG2/1,0432/A105	1	3/06	
CA-65-D16A-ROD.80	CA	D16A	90 DEG ELBOW, 3D, BW, P235GH/1.0305/A106, DIN EN 10253-1	65	mm	65	mm	DIN EN 10253-1	P235GH/1.0305/A106	1	0/79	
CA-65-D16A-ROD.80	CA	D16A	90 DEG ELBOW, 3D, BW, P235GH/1.0305/A106, DIN EN 10253-1	65	mm	65	mm	DIN EN 10253-1	P235GH/1.0305/A106	1	0/79	
CA-65-D16A-ROD.80	CA	D16A	90 DEG ELBOW, 3D, BW, P235GH/1.0305/A106, DIN EN 10253-1	65	mm	65	mm	DIN EN 10253-1	P235GH/1.0305/A106	1	0/79	
CA-65-D16A-ROD.80	CA	D16A	PLAIN FLANGE, DIN 1, FFFE/WN, PN 16, S235JRG2/1,0432/A105, DIN EN 1092-1	65	mm	65	mm	DIN EN 1092-1	S235JRG2/1,0432/A105	1	3/06	
CA-65-D16A-ROD.80	CA	D16A	PLAIN FLANGE, DIN 1, FFFE/WN, PN 16, S235JRG2/1,0432/A105, DIN EN 1092-1	65	mm	65	mm	DIN EN 1092-1	S235JRG2/1,0432/A105	1	3/06	
CA-65-D16A-ROD.80	CA	D16A	90 DEG ELBOW, 3D, BW, P235GH/1.0305/A106, DIN EN 10253-1	65	mm	65	mm	DIN EN 10253-1	P235GH/1.0305/A106	1	0/79	
CA-65-D16A-ROD.80	CA	D16A	90 DEG ELBOW, 3D, BW, P235GH/1.0305/A106, DIN EN 10253-1	65	mm	65	mm	DIN EN 10253-1	P235GH/1.0305/A106	1	0/79	
CA-20-D16A-ROD.100	CA	D16A	SOCKOLET, CL3000, SW, ASTM-A105, ASME B16.11	65	mm	20	mm	ASME B16.11	ASTM A105	1	0/15	
CA-20-D16A-ROD.100	CA	D16A	90 DEG ELBOW, CL 3000, SW, ASTM A105, ASME B16.11	20	mm	20	mm	ASME B16.11	ASTM A105	1	0/32	
CA-20-D16A-ROD.91	CA	D16A	SOCKOLET, CL3000, SW, ASTM-A105, ASME B16.11	50	mm	20	mm	ASME B16.11	ASTM A105	1	0/15	
CA-20-D16A-ROD.91	CA	D16A	90 DEG ELBOW, CL 3000, SW, ASTM A105, ASME B16.11	20	mm	20	mm	ASME B16.11	ASTM A105	1	0/32	
CA-20-D16A-ROD.91	CA	D16A	45 DEG ELBOW, CL 3000, SW, ASTM A105, ASME B16.11	20	mm	20	mm	ASME B16.11	ASTM A105	1	0/25	
CA-20-D16A-ROD.99	CA	D16A	SOCKOLET, CL3000, SW, ASTM-A105, ASME B16.11	65	mm	20	mm	ASME B16.11	ASTM A105	1	0/15	
CA-20-D16A-ROD.99	CA	D16A	90 DEG ELBOW, CL 3000, SW, ASTM A105, ASME B16.11	20	mm	20	mm	ASME B16.11	ASTM A105	1	0/32	
CA-32-D16A-ROD.90	CA	D16A	90 DEG ELBOW, CL 3000, SW, ASTM A105, ASME B16.11	32	mm	32	mm	ASME B16.11	ASTM A105	1	0/86	
CA-32-D16A-ROD.90	CA	D16A	90 DEG ELBOW, CL 3000, SW, ASTM A105, ASME B16.11	32	mm	32	mm	ASME B16.11	ASTM A105	1	0/86	
CA-32-D16A-ROD.90	CA	D16A	90 DEG ELBOW, CL 3000, SW, ASTM A105, ASME B16.11	32	mm	32	mm	ASME B16.11	ASTM A105	1	0/86	
CA-32-D16A-ROD.90	CA	D16A	90 DEG ELBOW, CL 3000, SW, ASTM A105, ASME B16.11	32	mm	32	mm	ASME B16.11	ASTM A105	1	0/86	
CA-32-D16A-ROD.90	CA	D16A	90 DEG ELBOW, CL 3000, SW, ASTM A105, ASME B16.11	32	mm	32	mm	ASME B16.11	ASTM A105	1	0/86	
CA-32-D16A-ROD.90	CA	D16A	90 DEG ELBOW, CL 3000, SW, ASTM A105, ASME B16.11	32	mm	32	mm	ASME B16.11	ASTM A105	1	0/86	
CA-50-D16A-ROD.89	CA	D16A	90 DEG ELBOW, CL 3000, SW, ASTM A105, ASME B16.11	50	mm	50	mm	ASME B16.11	ASTM A105	1	1/77	

PIPE TAG	FLUID	SPECI.	TYPE	DN	UNITS	DN	UNITS	NORMATIVE	MATERIAL	QUANT.	HEIGHT	PRICE
CA-50-D16A-ROD.89	CA	D16A	90 DEG ELBOW, CL 3000, SW, ASTM A105, ASME B16.11	50	mm	50	mm	ASME B16.11	ASTM A105	1	1/77	
CA-50-D16A-ROD.89	CA	D16A	90 DEG ELBOW, CL 3000, SW, ASTM A105, ASME B16.11	50	mm	50	mm	ASME B16.11	ASTM A105	1	1/77	
CA-50-D16A-ROD.89	CA	D16A	90 DEG ELBOW, CL 3000, SW, ASTM A105, ASME B16.11	50	mm	50	mm	ASME B16.11	ASTM A105	1	1/77	
CA-50-D16A-ROD.89	CA	D16A	90 DEG ELBOW, CL 3000, SW, ASTM A105, ASME B16.11	50	mm	50	mm	ASME B16.11	ASTM A105	1	1/77	
CA-50-D16A-ROD.89	CA	D16A	90 DEG ELBOW, CL 3000, SW, ASTM A105, ASME B16.11	50	mm	50	mm	ASME B16.11	ASTM A105	1	1/77	
CA-50-D16A-ROD.89	CA	D16A	90 DEG ELBOW, CL 3000, SW, ASTM A105, ASME B16.11	50	mm	50	mm	ASME B16.11	ASTM A105	1	1/77	
CA-50-D16A-ROD.89	CA	D16A	90 DEG ELBOW, CL 3000, SW, ASTM A105, ASME B16.11	50	mm	50	mm	ASME B16.11	ASTM A105	1	1/77	
CA-50-D16A-ROD.89	CA	D16A	REDUCING BRANCH TEE, BW, ASTM-A105, ASME B16.11	50	mm	32	mm	DIN EN 10253-1	P235GH/1.0305/A106	1	0/99	
CA-50-D16A-ROD.89	CA	D16A	90 DEG ELBOW, CL 3000, SW, ASTM A105, ASME B16.11	50	mm	50	mm	ASME B16.11	ASTM A105	1	1/77	
CA-50-D16A-ROD.89	CA	D16A	90 DEG ELBOW, CL 3000, SW, ASTM A105, ASME B16.11	50	mm	50	mm	ASME B16.11	ASTM A105	1	1/77	
CA-50-D16A-ROD.89	CA	D16A	45 DEG ELBOW, CL 3000, SW, ASTM A105, ASME B16.11	50	mm	50	mm	ASME B16.11	ASTM A105	1	1/36	
CA-50-D16A-ROD.89	CA	D16A	45 DEG ELBOW, CL 3000, SW, ASTM A105, ASME B16.11	50	mm	50	mm	ASME B16.11	ASTM A105	1	1/36	
CA-50-D16A-ROD.89	CA	D16A	SOCKOLET, CL3000, SW, ASTM-A105, ASME B16.11	50	mm	20	mm	ASME B16.11	ASTM A105	1	0/15	
CA-50-D16A-ROD.89	CA	D16A	90 DEG ELBOW, CL 3000, SW, ASTM A105, ASME B16.11	50	mm	50	mm	ASME B16.11	ASTM A105	1	1/77	
CA-50-D16A-ROD.89	CA	D16A	90 DEG ELBOW, CL 3000, SW, ASTM A105, ASME B16.11	50	mm	50	mm	ASME B16.11	ASTM A105	1	1/77	
CA-50-D16A-ROD.89	CA	D16A	TEE, CL 3000, SW, ASTM-A105, ASME B16.11	50	mm	50	mm	ASME B16.11	ASTM A105	1	1/91	
CA-50-D16A-ROD.89	CA	D16A	REDUCING BRANCH TEE, BW, P235GH/1.0305/A106, DIN EN 10253-1	150	mm	50	mm	DIN EN 10253-1	P235GH/1.0305/A106	1	2/69	
CA-50-D16A-ROD.89	CA	D16A	SOCKOLET, CL3000, SW, ASTM-A105, ASME B16.11	50	mm	20	mm	ASME B16.11	ASTM A105	1	0/15	
CA-50-D16A-ROD.89	CA	D16A	REDUCING BRANCH TEE, CL3000, SW, ASTM-A105, ASME B16.11	50	mm	32	mm	ASME B16.11	ASTM A105	1	0/99	
CA-50-D16A-ROD.89	CA	D16A	SOCKOLET, CL3000, SW, ASTM-A105, ASME B16.11	50	mm	20	mm	ASME B16.11	ASTM A105	1	0/15	
CA-50-D16A-ROD.89	CA	D16A	SOCKOLET, CL3000, SW, ASTM-A105, ASME B16.11	50	mm	20	mm	ASME B16.11	ASTM A105	1	0/15	
CA-50-D16A-ROD.89	CA	D16A	90 DEG ELBOW, CL 3000, SW, ASTM A105, ASME B16.11	50	mm	50	mm	ASME B16.11	ASTM A105	1	1/77	
CA-50-D16A-ROD.89	CA	D16A	SOCKOLET, CL3000, SW, ASTM-A105, ASME B16.11	50	mm	20	mm	ASME B16.11	ASTM A105	1	0/15	
CA-50-D16A-ROD.89	CA	D16A	90 DEG ELBOW, CL 3000, SW, ASTM A105, ASME B16.11	50	mm	50	mm	ASME B16.11	ASTM A105	1	1/77	
CA-65-D16A-ROD.98	CA	D16A	90 DEG ELBOW, 3D, BW, P235GH/1.0305/A106, DIN EN 10253-1	65	mm	65	mm	DIN EN 10253-1	P235GH/1.0305/A106	1	0/79	
CA-65-D16A-ROD.98	CA	D16A	90 DEG ELBOW, 3D, BW, P235GH/1.0305/A106, DIN EN 10253-1	65	mm	65	mm	DIN EN 10253-1	P235GH/1.0305/A106	1	0/79	
CA-65-D16A-ROD.98	CA	D16A	90 DEG ELBOW, 3D, BW, P235GH/1.0305/A106, DIN EN 10253-1	65	mm	65	mm	DIN EN 10253-1	P235GH/1.0305/A106	1	0/79	
CA-65-D16A-ROD.98	CA	D16A	90 DEG ELBOW, 3D, BW, P235GH/1.0305/A106, DIN EN 10253-1	65	mm	65	mm	DIN EN 10253-1	P235GH/1.0305/A106	1	0/79	
CA-65-D16A-ROD.98	CA	D16A	TEE,BW, P235GH/1.0305/A106, DIN EN 10253-1	65	mm	65	mm	DIN EN 10253-1	P235GH/1.0305/A106	1	2/36	
CA-65-D16A-ROD.98	CA	D16A	TEE,BW, P235GH/1.0305/A106, DIN EN 10253-1	65	mm	65	mm	DIN EN 10253-1	P235GH/1.0305/A106	1	2/36	
CA-65-D16A-ROD.98	CA	D16A	ECCENTRIC REDUCER, BW, P235GH/1.0305/A106, DIN EN 10253-1	65	mm	32	mm	DIN EN 10253-1	P235GH/1.0305/A106	1	0/70	
CA-65-D16A-ROD.98	CA	D16A	ECCENTRIC REDUCER, BW, P235GH/1.0305/A106, DIN EN 10253-1	65	mm	32	mm	DIN EN 10253-1	P235GH/1.0305/A106	1	0/70	
CA-65-D16A-ROD.98	CA	D16A	TEE,BW, P235GH/1.0305/A106, DIN EN 10253-1	65	mm	65	mm	DIN EN 10253-1	P235GH/1.0305/A106	1	2/36	
CA-65-D16A-ROD.98	CA	D16A	90 DEG ELBOW, CL 3000, SW, ASTM A105, ASME B16.11	20	mm	20	mm	ASME B16.11	ASTM A105	1	0/32	
CA-65-D16A-ROD.98	CA	D16A	90 DEG ELBOW, CL 3000, SW, ASTM A105, ASME B16.11	20	mm	20	mm	ASME B16.11	ASTM A105	1	0/32	
CA-65-D16A-ROD.98	CA	D16A	ECCENTRIC REDUCER, BW, P235GH/1.0305/A106, DIN EN 10253-1	32	mm	20	mm	ASME B16.11	ASTM A105	1	0/17	
CA-65-D16A-ROD.98	CA	D16A	TEE,BW, P235GH/1.0305/A106, DIN EN 10253-1	65	mm	65	mm	DIN EN 10253-1	P235GH/1.0305/A106	1	2/36	
CA-65-D16A-ROD.98	CA	D16A	90 DEG ELBOW, CL 3000, SW, ASTM A105, ASME B16.11	20	mm	20	mm	ASME B16.11	ASTM A105	1	0/32	
CA-65-D16A-ROD.98	CA	D16A	90 DEG ELBOW, CL 3000, SW, ASTM A105, ASME B16.11	20	mm	20	mm	ASME B16.11	ASTM A105	1	0/32	
CA-65-D16A-ROD.98	CA	D16A	SOCKOLET, CL3000, SW, ASTM-A105, ASME B16.11	65	mm	20	mm	ASME B16.11	ASTM A105	1	0/15	
CA-65-D16A-ROD.98	CA	D16A	90 DEG ELBOW, CL 3000, SW, ASTM A105, ASME B16.11	20	mm	20	mm	ASME B16.11	ASTM A105	1	0/32	
CA-65-D16A-ROD.98	CA	D16A	90 DEG ELBOW, CL 3000, SW, ASTM A105, ASME B16.11	20	mm	20	mm	ASME B16.11	ASTM A105	1	0/32	
CA-65-D16A-ROD.98	CA	D16A	TEE,BW, P235GH/1.0305/A106, DIN EN 10253-1	65	mm	65	mm	DIN EN 10253-1	P235GH/1.0305/A106	1	2/36	
CA-65-D16A-ROD.98	CA	D16A	90 DEG ELBOW, CL 3000, SW, ASTM A105, ASME B16.11	20	mm	20	mm	ASME B16.11	ASTM A105	1	0/32	
CA-65-D16A-ROD.98	CA	D16A	ECCENTRIC REDUCER, BW, P235GH/1.0305/A106, DIN EN 10253-1	65	mm	32	mm	DIN EN 10253-1	P235GH/1.0305/A106	1	0/70	
CA-65-D16A-ROD.98	CA	D16A	ECCENTRIC REDUCER, BW, P235GH/1.0305/A106, DIN EN 10253-1	32	mm	20	mm	ASME B16.11	ASTM A105	1	0/17	
CA-65-D16A-ROD.98	CA	D16A	TEE,BW, P235GH/1.0305/A106, DIN EN 10253-1	65	mm	65	mm	DIN EN 10253-1	P235GH/1.0305/A106	1	2/36	
CA-65-D16A-ROD.98	CA	D16A	REDUCING BRANCH TEE, BW, P235GH/1.0305/A106, DIN EN 10253-1	150	mm	65	mm	DIN EN 10253-1	P235GH/1.0305/A106	1	3/68	
CA-65-D16A-ROD.98	CA	D16A	ECCENTRIC REDUCER, BW, P235GH/1.0305/A106, DIN EN 10253-1	32	mm	20	mm	ASME B16.11	ASTM A105	1	0/17	
CA-65-D16A-ROD.98	CA	D16A	ECCENTRIC REDUCER, BW, P235GH/1.0305/A106, DIN EN 10253-1	65	mm	32	mm	DIN EN 10253-1	P235GH/1.0305/A106	1	0/70	
CA-65-D16A-ROD.98	CA	D16A	ECCENTRIC REDUCER, BW, P235GH/1.0305/A106, DIN EN 10253-1	32	mm	20	mm	ASME B16.11	ASTM A105	1	0/17	
CA-65-D16A-ROD.98	CA	D16A	ECCENTRIC REDUCER, BW, P235GH/1.0305/A106, DIN EN 10253-1	65	mm	32	mm	DIN EN 10253-1	P235GH/1.0305/A106	1	0/70	
CA-65-D16A-ROD.98	CA	D16A	ECCENTRIC REDUCER, BW, P235GH/1.0305/A106, DIN EN 10253-1	32	mm	20	mm	ASME B16.11	ASTM A105	1	0/17	
CA-65-D16A-ROD.79	CA	D16A	PLAIN FLANGE, DIN 1, FFFE/WN, PN 16, S235JRG2/1,0432/A105, DIN EN 1092-1	65	mm	65	mm	DIN EN 1092-1	S235JRG2/1,0432/A105	1	3/06	
CA-65-D16A-ROD.79	CA	D16A	PLAIN FLANGE, DIN 1, FFFE/WN, PN 16, S235JRG2/1,0432/A105, DIN EN 1092-1	65	mm	65	mm	DIN EN 1092-1	S235JRG2/1,0432/A105	1	3/06	

SCREW AIR

YPE OF ELEMENTS	DESCRIPTION		BOLT DIAMETER	LENGTH	QUANTITY	PRICE
Bolts/Nut/Washer	B	HEX HEAD SCREW (ISO 4014) WITH 1 HEAVY HEX NUTS (ISO 4032) AND 1 FLAT WASHER (ISO 7089), 8.8 ZINC PLATED 80 mm	16 mm	80 mm	40	
Bolts/Nut/Washer	B	HEX HEAD SCREW (ISO 4014) WITH 1 HEAVY HEX NUTS (ISO 4032) AND 1 FLAT WASHER (ISO 7089), 8.8 ZINC PLATED 130 mm	16 mm	130 mm	40	
Gaskets	G	GASKET, PN 16, COMPRESSION FIBRE WITH BONDING AGENT, 2MM THICKNESS	65 mm	2 mm	10	

PIPE AIR

PIPE TAG	TYPE OF FLUID	CONNECTION	SPECI.	DN	UNITS	THICKNESS(mm)	NORMATIVE	MATERIAL	LENGHT	WEIGHT (Kg)	PRICE
CA-25-D16A-ROD.77	CA	PE	D16A	25	MM	3,25 mm	DIN EN 10255 (DIN 2440) SEAMLESS	P235GH/1.0305/A106	1365,6 mm	3/332	
CA-32-D16A-ROD.81	CA	PE	D16A	32	MM	3,25 mm	DIN EN 10255 (DIN 2440) SEAMLESS	P235GH/1.0305/A106	5140,8 mm	16/144	
CA-32-D16A-ROD.81	CA	PE	D16A	32	MM	3,25 mm	DIN EN 10255 (DIN 2440) SEAMLESS	P235GH/1.0305/A106	267,6 mm	0/842	
CA-32-D16A-ROD.81	CA	PE	D16A	32	MM	3,25 mm	DIN EN 10255 (DIN 2440) SEAMLESS	P235GH/1.0305/A106	945,6 mm	2/968	
CA-32-D16A-ROD.81	CA	PE	D16A	32	MM	3,25 mm	DIN EN 10255 (DIN 2440) SEAMLESS	P235GH/1.0305/A106	288 mm	0/904	
CA-32-D16A-ROD.81	CA	PE	D16A	32	MM	3,25 mm	DIN EN 10255 (DIN 2440) SEAMLESS	P235GH/1.0305/A106	1305,6 mm	4/101	
CA-65-D16A-ROD.80	CA	BE	D16A	65	MM	2,90 mm	DIN EN 10216-1 (DIN 2448) SEAMLESS	P235GH/1.0305/A106	240 mm	1/267	
CA-65-D16A-ROD.80	CA	BE	D16A	65	MM	2,90 mm	DIN EN 10216-1 (DIN 2448) SEAMLESS	P235GH/1.0305/A106	2230,8 mm	11/781	
CA-65-D16A-ROD.80	CA	BE	D16A	65	MM	2,90 mm	DIN EN 10216-1 (DIN 2448) SEAMLESS	P235GH/1.0305/A106	2074,8 mm	10/955	
CA-65-D16A-ROD.80	CA	BE	D16A	65	MM	2,90 mm	DIN EN 10216-1 (DIN 2448) SEAMLESS	P235GH/1.0305/A106	388,8 mm	2/052	
CA-65-D16A-ROD.80	CA	BE	D16A	65	MM	2,90 mm	DIN EN 10216-1 (DIN 2448) SEAMLESS	P235GH/1.0305/A106	2094 mm	11/053	
CA-65-D16A-ROD.80	CA	BE	D16A	65	MM	2,90 mm	DIN EN 10216-1 (DIN 2448) SEAMLESS	P235GH/1.0305/A106	564 mm	2/981	
CA-50-D16A-ROD.63	CA	PE	D16A	40	MM	3,25 mm	DIN EN 10255 (DIN 2440) SEAMLESS	P235GH/1.0305/A106	3250,8 mm	11/736	
CA-40-D16A-ROD.62	CA	PE	D16A	40	MM	3,25 mm	DIN EN 10255 (DIN 2440) SEAMLESS	P235GH/1.0305/A106	6468 mm	23/350	
CA-25-D16A-ROD.60	CA	PE	D16A	25	MM	3,25 mm	DIN EN 10255 (DIN 2440) SEAMLESS	P235GH/1.0305/A106	2773,2 mm	6/766	
CA-32-D16A-ROD.81	CA	PE	D16A	32	MM	3,25 mm	DIN EN 10255 (DIN 2440) SEAMLESS	P235GH/1.0305/A106	483,6 mm	1/519	
CA-65-D16A-ROD.79	CA	BE	D16A	65	MM	2,90 mm	DIN EN 10216-1 (DIN 2448) SEAMLESS	P235GH/1.0305/A106	3789,6 mm	20/011	
CA-32-D16A-ROD.81	CA	PE	D16A	32	MM	3,25 mm	DIN EN 10255 (DIN 2440) SEAMLESS	P235GH/1.0305/A106	5904 mm	18/538	
CA-25-D16A-ROD.83	CA	PE	D16A	25	MM	3,25 mm	DIN EN 10255 (DIN 2440) SEAMLESS	P235GH/1.0305/A106	246 mm	0/599	
CA-25-D16A-ROD.83	CA	PE	D16A	25	MM	3,25 mm	DIN EN 10255 (DIN 2440) SEAMLESS	P235GH/1.0305/A106	122,4 mm	0/300	
CA-25-D16A-ROD.83	CA	PE	D16A	25	MM	3,25 mm	DIN EN 10255 (DIN 2440) SEAMLESS	P235GH/1.0305/A106	1651,2 mm	4/028	
CA-40-D16A-ROD.62	CA	PE	D16A	40	MM	3,25 mm	DIN EN 10255 (DIN 2440) SEAMLESS	P235GH/1.0305/A106	2576,4 mm	9/300	
CA-40-D16A-ROD.62	CA	PE	D16A	40	MM	3,25 mm	DIN EN 10255 (DIN 2440) SEAMLESS	P235GH/1.0305/A106	2364 mm	8/533	
CA-40-D16A-ROD.62	CA	PE	D16A	40	MM	3,25 mm	DIN EN 10255 (DIN 2440) SEAMLESS	P235GH/1.0305/A106	62428,8 mm	225/368	
CA-40-D16A-ROD.84	CA	PE	D16A	40	MM	3,25 mm	DIN EN 10255 (DIN 2440) SEAMLESS	P235GH/1.0305/A106	2796 mm	10/092	
CA-40-D16A-ROD.62	CA	PE	D16A	40	MM	3,25 mm	DIN EN 10255 (DIN 2440) SEAMLESS	P235GH/1.0305/A106	1290 mm	4/656	
CA-40-D16A-ROD.84	CA	PE	D16A	40	MM	3,25 mm	DIN EN 10255 (DIN 2440) SEAMLESS	P235GH/1.0305/A106	854,4 mm	3/083	
CA-40-D16A-ROD.84	CA	PE	D16A	40	MM	3,25 mm	DIN EN 10255 (DIN 2440) SEAMLESS	P235GH/1.0305/A106	2814 mm	10/158	
CA-40-D16A-ROD.62	CA	PE	D16A	40	MM	3,25 mm	DIN EN 10255 (DIN 2440) SEAMLESS	P235GH/1.0305/A106	2203,2 mm	7/952	
CA-40-D16A-ROD.84	CA	PE	D16A	40	MM	3,25 mm	DIN EN 10255 (DIN 2440) SEAMLESS	P235GH/1.0305/A106	193,2 mm	0/697	
CA-50-D16A-ROD.30	CA	PE	D16A	50	MM	3,65 mm	DIN EN 10255 (DIN 2440) SEAMLESS	P235GH/1.0305/A106	6192 mm	31/580	
CA-50-D16A-ROD.30	CA	PE	D16A	50	MM	3,65 mm	DIN EN 10255 (DIN 2440) SEAMLESS	P235GH/1.0305/A106	960 mm	4/896	
CA-50-D16A-ROD.30	CA	PE	D16A	50	MM	3,65 mm	DIN EN 10255 (DIN 2440) SEAMLESS	P235GH/1.0305/A106	391,2 mm	1/995	
CA-50-D16A-ROD.30	CA	PE	D16A	50	MM	3,65 mm	DIN EN 10255 (DIN 2440) SEAMLESS	P235GH/1.0305/A106	1082,4 mm	5/518	
CA-25-D16A-ROD.68	CA	PE	D16A	25	MM	3,25 mm	DIN EN 10255 (DIN 2440) SEAMLESS	P235GH/1.0305/A106	542,4 mm	1/324	
CA-25-D16A-ROD.60	CA	PE	D16A	25	MM	3,25 mm	DIN EN 10255 (DIN 2440) SEAMLESS	P235GH/1.0305/A106	2133,6 mm	5/205	
CA-25-D16A-ROD.60	CA	PE	D16A	25	MM	3,25 mm	DIN EN 10255 (DIN 2440) SEAMLESS	P235GH/1.0305/A106	1902 mm	4/640	
CA-25-D16A-ROD.60	CA	PE	D16A	25	MM	3,25 mm	DIN EN 10255 (DIN 2440) SEAMLESS	P235GH/1.0305/A106	762 mm	1/859	
CA-25-D16A-ROD.60	CA	PE	D16A	25	MM	3,25 mm	DIN EN 10255 (DIN 2440) SEAMLESS	P235GH/1.0305/A106	1994,4 mm	4/867	
CA-25-D16A-ROD.60	CA	PE	D16A	25	MM	3,25 mm	DIN EN 10255 (DIN 2440) SEAMLESS	P235GH/1.0305/A106	783,6 mm	1/912	
CA-25-D16A-ROD.69	CA	PE	D16A	25	MM	3,25 mm	DIN EN 10255 (DIN 2440) SEAMLESS	P235GH/1.0305/A106	1275,6 mm	3/114	
CA-25-D16A-ROD.69	CA	PE	D16A	25	MM	3,25 mm	DIN EN 10255 (DIN 2440) SEAMLESS	P235GH/1.0305/A106	1592,4 mm	3/886	
CA-25-D16A-ROD.69	CA	PE	D16A	25	MM	3,25 mm	DIN EN 10255 (DIN 2440) SEAMLESS	P235GH/1.0305/A106	117,6 mm	0/287	
CA-25-D16A-ROD.69	CA	PE	D16A	25	MM	3,25 mm	DIN EN 10255 (DIN 2440) SEAMLESS	P235GH/1.0305/A106	400,8 mm	0/977	
CA-15-D16A-ROD.88	CA	PE	D16A	25	MM	3,25 mm	DIN EN 10255 (DIN 2440) SEAMLESS	P235GH/1.0305/A106	1359,6 mm	3/317	
CA-25-D16A-ROD.75	CA	PE	D16A	25	MM	3,25 mm	DIN EN 10255 (DIN 2440) SEAMLESS	P235GH/1.0305/A106	163,2 mm	0/397	
CA-32-D16A-ROD.82	CA	PE	D16A	32	MM	3,25 mm	DIN EN 10255 (DIN 2440) SEAMLESS	P235GH/1.0305/A106	279,6 mm	0/876	
CA-25-D16A-ROD.83	CA	PE	D16A	25	MM	3,25 mm	DIN EN 10255 (DIN 2440) SEAMLESS	P235GH/1.0305/A106	2101,2 mm	5/127	

PIPE TAG	TYPE OF FLUID	CONNECTION	SPECI.	DN	UNITS	THICKNESS(mm)	NORMATIVE	MATERIAL	LENGHT	WEIGHT (Kg)	PRICE
CA-32-D16A-ROD.81	CA	PE	D16A	32	MM	3,25 mm	DIN EN 10255 (DIN 2440) SEAMLESS	P235GH/1.0305/A106	146,4 mm	0/458	
CA-25-D16A-ROD.77	CA	PE	D16A	25	MM	3,25 mm	DIN EN 10255 (DIN 2440) SEAMLESS	P235GH/1.0305/A106	241,2 mm	0/589	
CA-15-D16A-ROD.88	CA	PE	D16A	25	MM	3,25 mm	DIN EN 10255 (DIN 2440) SEAMLESS	P235GH/1.0305/A106	4346,4 mm	10/606	
CA-15-D16A-ROD.88	CA	PE	D16A	15	MM	2,65 mm	DIN EN 10255 (DIN 2440) SEAMLESS	P235GH/1.0305/A106	1521,6 mm	1/856	
CA-50-D16A-ROD.63	CA	PE	D16A	40	MM	3,25 mm	DIN EN 10255 (DIN 2440) SEAMLESS	P235GH/1.0305/A106	576 mm	2/079	
CA-65-D16A-ROD.79	CA	BE	D16A	65	MM	2,90 mm	DIN EN 10216-1 (DIN 2448) SEAMLESS	P235GH/1.0305/A106	752,4 mm	3/970	
CA-15-D16A-ROD.74	CA	PE	D16A	15	MM	2,65 mm	DIN EN 10255 (DIN 2440) SEAMLESS	P235GH/1.0305/A106	328,8 mm	0/402	
CA-65-D16A-ROD.79	CA	BE	D16A	65	MM	2,90 mm	DIN EN 10216-1 (DIN 2448) SEAMLESS	P235GH/1.0305/A106	14460 mm	76/348	
CA-20-D16A-ROD.78	CA	PE	D16A	20	MM	2,65 mm	DIN EN 10255 (DIN 2440) SEAMLESS	P235GH/1.0305/A106	331,2 mm	0/523	
CA-50-D16A-ROD.63	CA	PE	D16A	40	MM	3,25 mm	DIN EN 10255 (DIN 2440) SEAMLESS	P235GH/1.0305/A106	326,4 mm	1/177	
CA-50-D16A-ROD.63	CA	PE	D16A	50	MM	3,65 mm	DIN EN 10255 (DIN 2440) SEAMLESS	P235GH/1.0305/A106	363,6 mm	1/852	
CA-65-D16A-ROD.79	CA	BE	D16A	65	MM	2,90 mm	DIN EN 10216-1 (DIN 2448) SEAMLESS	P235GH/1.0305/A106	2714,4 mm	14/335	
CA-32-D16A-ROD.81	CA	PE	D16A	32	MM	3,25 mm	DIN EN 10255 (DIN 2440) SEAMLESS	P235GH/1.0305/A106	141,6 mm	0/446	
CA-25-D16A-ROD.83	CA	PE	D16A	25	MM	3,25 mm	DIN EN 10255 (DIN 2440) SEAMLESS	P235GH/1.0305/A106	355,2 mm	0/865	
CA-50-D16A-ROD.63	CA	PE	D16A	40	MM	3,25 mm	DIN EN 10255 (DIN 2440) SEAMLESS	P235GH/1.0305/A106	220,8 mm	0/798	
CA-65-D16A-ROD.79	CA	BE	D16A	65	MM	2,90 mm	DIN EN 10216-1 (DIN 2448) SEAMLESS	P235GH/1.0305/A106	3073,2 mm	16/229	
CA-65-D16A-ROD.79	CA	BE	D16A	65	MM	2,90 mm	DIN EN 10216-1 (DIN 2448) SEAMLESS	P235GH/1.0305/A106	9636 mm	50/876	
CA-50-D16A-ROD.63	CA	PE	D16A	50	MM	3,65 mm	DIN EN 10255 (DIN 2440) SEAMLESS	P235GH/1.0305/A106	5900,4 mm	30/094	
CA-25-D16A-ROD.77	CA	PE	D16A	25	MM	3,25 mm	DIN EN 10255 (DIN 2440) SEAMLESS	P235GH/1.0305/A106	470,4 mm	1/148	
CA-15-D16A-ROD.88	CA	PE	D16A	25	MM	3,25 mm	DIN EN 10255 (DIN 2440) SEAMLESS	P235GH/1.0305/A106	1474,8 mm	3/598	
CA-32-D16A-ROD.73	CA	PE	D16A	32	MM	3,25 mm	DIN EN 10255 (DIN 2440) SEAMLESS	P235GH/1.0305/A106	230,4 mm	0/723	
CA-15-D16A-ROD.76	CA	PE	D16A	15	MM	2,65 mm	DIN EN 10255 (DIN 2440) SEAMLESS	P235GH/1.0305/A106	328,8 mm	0/402	
CA-50-D16A-ROD.63	CA	PE	D16A	40	MM	3,25 mm	DIN EN 10255 (DIN 2440) SEAMLESS	P235GH/1.0305/A106	228 mm	0/824	
CA-25-D16A-ROD.83	CA	PE	D16A	25	MM	3,25 mm	DIN EN 10255 (DIN 2440) SEAMLESS	P235GH/1.0305/A106	686,4 mm	1/676	
CA-50-D16A-ROD.63	CA	PE	D16A	40	MM	3,25 mm	DIN EN 10255 (DIN 2440) SEAMLESS	P235GH/1.0305/A106	2590,8 mm	9/351	
CA-50-D16A-ROD.63	CA	PE	D16A	40	MM	3,25 mm	DIN EN 10255 (DIN 2440) SEAMLESS	P235GH/1.0305/A106	373,2 mm	1/346	
CA-15-D16A-ROD.74	CA	PE	D16A	15	MM	2,65 mm	DIN EN 10255 (DIN 2440) SEAMLESS	P235GH/1.0305/A106	266,4 mm	0/325	
CA-32-D16A-ROD.81	CA	PE	D16A	32	MM	3,25 mm	DIN EN 10255 (DIN 2440) SEAMLESS	P235GH/1.0305/A106	141,6 mm	0/446	
CA-65-D16A-ROD.79	CA	BE	D16A	65	MM	2,90 mm	DIN EN 10216-1 (DIN 2448) SEAMLESS	P235GH/1.0305/A106	123,6 mm	0/652	
CA-25-D16A-ROD.83	CA	PE	D16A	25	MM	3,25 mm	DIN EN 10255 (DIN 2440) SEAMLESS	P235GH/1.0305/A106	391,2 mm	0/953	
CA-25-D16A-ROD.83	CA	PE	D16A	25	MM	3,25 mm	DIN EN 10255 (DIN 2440) SEAMLESS	P235GH/1.0305/A106	5146,8 mm	12/559	
CA-15-D16A-ROD.76	CA	PE	D16A	15	MM	2,65 mm	DIN EN 10255 (DIN 2440) SEAMLESS	P235GH/1.0305/A106	266,4 mm	0/325	
CA-25-D16A-ROD.69	CA	PE	D16A	25	MM	3,25 mm	DIN EN 10255 (DIN 2440) SEAMLESS	P235GH/1.0305/A106	4522,8 mm	11/036	
CA-25-D16A-ROD.83	CA	PE	D16A	25	MM	3,25 mm	DIN EN 10255 (DIN 2440) SEAMLESS	P235GH/1.0305/A106	170,4 mm	0/416	
CA-32-D16A-ROD.73	CA	PE	D16A	32	MM	3,25 mm	DIN EN 10255 (DIN 2440) SEAMLESS	P235GH/1.0305/A106	331,2 mm	1/040	
CA-50-D16A-ROD.30	CA	PE	D16A	50	MM	3,65 mm	DIN EN 10255 (DIN 2440) SEAMLESS	P235GH/1.0305/A106	840 mm	4/285	
CA-50-D16A-ROD.63	CA	PE	D16A	40	MM	3,25 mm	DIN EN 10255 (DIN 2440) SEAMLESS	P235GH/1.0305/A106	16111,2 mm	58/160	
CA-25-D16A-ROD.77	CA	PE	D16A	25	MM	3,25 mm	DIN EN 10255 (DIN 2440) SEAMLESS	P235GH/1.0305/A106	1138,8 mm	2/779	
CA-32-D16A-ROD.82	CA	PE	D16A	32	MM	3,25 mm	DIN EN 10255 (DIN 2440) SEAMLESS	P235GH/1.0305/A106	1088,4 mm	3/419	
CA-25-D16A-ROD.69	CA	PE	D16A	25	MM	3,25 mm	DIN EN 10255 (DIN 2440) SEAMLESS	P235GH/1.0305/A106	60 mm	0/145	
CA-32-D16A-ROD.82	CA	PE	D16A	32	MM	3,25 mm	DIN EN 10255 (DIN 2440) SEAMLESS	P235GH/1.0305/A106	892,8 mm	2/805	
CA-50-D16A-ROD.30	CA	PE	D16A	50	MM	3,65 mm	DIN EN 10255 (DIN 2440) SEAMLESS	P235GH/1.0305/A106	2152,8 mm	10/982	
CA-65-D16A-ROD.79	CA	BE	D16A	65	MM	2,90 mm	DIN EN 10216-1 (DIN 2448) SEAMLESS	P235GH/1.0305/A106	342 mm	1/809	
CA-65-D16A-ROD.79	CA	BE	D16A	65	MM	2,90 mm	DIN EN 10216-1 (DIN 2448) SEAMLESS	P235GH/1.0305/A106	182,4 mm	0/963	
CA-50-D16A-ROD.30	CA	PE	D16A	50	MM	3,65 mm	DIN EN 10255 (DIN 2440) SEAMLESS	P235GH/1.0305/A106	4704 mm	23/993	
CA-25-D16A-ROD.83	CA	PE	D16A	25	MM	3,25 mm	DIN EN 10255 (DIN 2440) SEAMLESS	P235GH/1.0305/A106	87,6 mm	0/215	
CA-25-D16A-ROD.75	CA	PE	D16A	25	MM	3,25 mm	DIN EN 10255 (DIN 2440) SEAMLESS	P235GH/1.0305/A106	2194,8 mm	5/354	
CA-15-D16A-ROD.88	CA	PE	D16A	15	MM	2,65 mm	DIN EN 10255 (DIN 2440) SEAMLESS	P235GH/1.0305/A106	120 mm	0/146	

PIPE TAG	TYPE OF FLUID	CONNECTION	SPECI.	DN	UNITS	THICKNESS(mm)	NORMATIVE	MATERIAL	LENGHT	WEIGHT (Kg)	PRICE
CA-65-D16A-ROD.79	CA	BE	D16A	65	MM	2,90 mm	DIN EN 10216-1 (DIN 2448) SEAMLESS	P235GH/1.0305/A106	5049,6 mm	26/661	
CA-50-D16A-ROD.30	CA	PE	D16A	50	MM	3,65 mm	DIN EN 10255 (DIN 2440) SEAMLESS	P235GH/1.0305/A106	846 mm	4/314	
CA-20-D16A-ROD.78	CA	PE	D16A	20	MM	2,65 mm	DIN EN 10255 (DIN 2440) SEAMLESS	P235GH/1.0305/A106	247,2 mm	0/390	
CA-65-D16A-ROD.79	CA	BE	D16A	65	MM	2,90 mm	DIN EN 10216-1 (DIN 2448) SEAMLESS	P235GH/1.0305/A106	8924,4 mm	47/124	
CA-25-D16A-ROD.69	CA	PE	D16A	25	MM	3,25 mm	DIN EN 10255 (DIN 2440) SEAMLESS	P235GH/1.0305/A106	2618,4 mm	6/388	
CA-65-D16A-ROD.79	CA	BE	D16A	65	MM	2,90 mm	DIN EN 10216-1 (DIN 2448) SEAMLESS	P235GH/1.0305/A106	3398,4 mm	17/944	
CA-25-D16A-ROD.60	CA	PE	D16A	25	MM	3,25 mm	DIN EN 10255 (DIN 2440) SEAMLESS	P235GH/1.0305/A106	6102 mm	14/890	
CA-25-D16A-ROD.68	CA	PE	D16A	25	MM	3,25 mm	DIN EN 10255 (DIN 2440) SEAMLESS	P235GH/1.0305/A106	3855,6 mm	9/409	
CA-25-D16A-ROD.68	CA	PE	D16A	25	MM	3,25 mm	DIN EN 10255 (DIN 2440) SEAMLESS	P235GH/1.0305/A106	2066,4 mm	5/042	
CA-25-D16A-ROD.68	CA	PE	D16A	25	MM	3,25 mm	DIN EN 10255 (DIN 2440) SEAMLESS	P235GH/1.0305/A106	110,4 mm	0/271	
CA-25-D16A-ROD.60	CA	PE	D16A	25	MM	3,25 mm	DIN EN 10255 (DIN 2440) SEAMLESS	P235GH/1.0305/A106	355,2 mm	0/867	
CA-20-D16A-ROD.72	CA	PE	D16A	20	MM	2,65 mm	DIN EN 10255 (DIN 2440) SEAMLESS	P235GH/1.0305/A106	1224 mm	1/934	
CA-25-D16A-ROD.60	CA	PE	D16A	25	MM	3,25 mm	DIN EN 10255 (DIN 2440) SEAMLESS	P235GH/1.0305/A106	1356 mm	3/308	
CA-25-D16A-ROD.69	CA	PE	D16A	25	MM	3,25 mm	DIN EN 10255 (DIN 2440) SEAMLESS	P235GH/1.0305/A106	9583,2 mm	23/383	
CA-20-D16A-ROD.70	CA	PE	D16A	20	MM	2,65 mm	DIN EN 10255 (DIN 2440) SEAMLESS	P235GH/1.0305/A106	324 mm	0/512	
CA-25-D16A-ROD.68	CA	PE	D16A	25	MM	3,25 mm	DIN EN 10255 (DIN 2440) SEAMLESS	P235GH/1.0305/A106	902,4 mm	2/203	
CA-25-D16A-ROD.60	CA	PE	D16A	25	MM	3,25 mm	DIN EN 10255 (DIN 2440) SEAMLESS	P235GH/1.0305/A106	546 mm	1/332	
CA-15-D16A-ROD.71	CA	PE	D16A	15	MM	2,65 mm	DIN EN 10255 (DIN 2440) SEAMLESS	P235GH/1.0305/A106	315,6 mm	0/385	
CA-25-D16A-ROD.68	CA	PE	D16A	25	MM	3,25 mm	DIN EN 10255 (DIN 2440) SEAMLESS	P235GH/1.0305/A106	931,2 mm	2/273	
CA-25-D16A-ROD.68	CA	PE	D16A	25	MM	3,25 mm	DIN EN 10255 (DIN 2440) SEAMLESS	P235GH/1.0305/A106	15346,8 mm	37/446	
CA-25-D16A-ROD.68	CA	PE	D16A	25	MM	3,25 mm	DIN EN 10255 (DIN 2440) SEAMLESS	P235GH/1.0305/A106	110,4 mm	0/271	
CA-25-D16A-ROD.68	CA	PE	D16A	25	MM	3,25 mm	DIN EN 10255 (DIN 2440) SEAMLESS	P235GH/1.0305/A106	240 mm	0/586	
CA-25-D16A-ROD.60	CA	PE	D16A	25	MM	3,25 mm	DIN EN 10255 (DIN 2440) SEAMLESS	P235GH/1.0305/A106	3451,2 mm	8/422	
CA-25-D16A-ROD.60	CA	PE	D16A	25	MM	3,25 mm	DIN EN 10255 (DIN 2440) SEAMLESS	P235GH/1.0305/A106	3710,4 mm	9/054	
CA-25-D16A-ROD.68	CA	PE	D16A	25	MM	3,25 mm	DIN EN 10255 (DIN 2440) SEAMLESS	P235GH/1.0305/A106	464,4 mm	1/132	
CA-25-D16A-ROD.68	CA	PE	D16A	25	MM	3,25 mm	DIN EN 10255 (DIN 2440) SEAMLESS	P235GH/1.0305/A106	225,6 mm	0/552	
CA-25-D16A-ROD.68	CA	PE	D16A	25	MM	3,25 mm	DIN EN 10255 (DIN 2440) SEAMLESS	P235GH/1.0305/A106	1363,2 mm	3/325	
CA-25-D16A-ROD.68	CA	PE	D16A	25	MM	3,25 mm	DIN EN 10255 (DIN 2440) SEAMLESS	P235GH/1.0305/A106	3504 mm	8/551	
CA-25-D16A-ROD.69	CA	PE	D16A	25	MM	3,25 mm	DIN EN 10255 (DIN 2440) SEAMLESS	P235GH/1.0305/A106	362,4 mm	0/884	
CA-15-D16A-ROD.85	CA	PE	D16A	15	MM	2,65 mm	DIN EN 10255 (DIN 2440) SEAMLESS	P235GH/1.0305/A106	207,6 mm	0/253	
CA-15-D16A-ROD.86	CA	PE	D16A	15	MM	2,65 mm	DIN EN 10255 (DIN 2440) SEAMLESS	P235GH/1.0305/A106	207,6 mm	0/253	
CA-65-D16A-ROD.80	CA	BE	D16A	65	MM	2,90 mm	DIN EN 10216-1 (DIN 2448) SEAMLESS	P235GH/1.0305/A106	182,4 mm	0/963	
CA-15-D16A-ROD.87	CA	PE	D16A	15	MM	2,65 mm	DIN EN 10255 (DIN 2440) SEAMLESS	P235GH/1.0305/A106	1960,8 mm	2/393	
CA-15-D16A-ROD.85	CA	PE	D16A	15	MM	2,65 mm	DIN EN 10255 (DIN 2440) SEAMLESS	P235GH/1.0305/A106	1960,8 mm	2/393	
CA-15-D16A-ROD.87	CA	PE	D16A	15	MM	2,65 mm	DIN EN 10255 (DIN 2440) SEAMLESS	P235GH/1.0305/A106	207,6 mm	0/253	
CA-15-D16A-ROD.86	CA	PE	D16A	15	MM	2,65 mm	DIN EN 10255 (DIN 2440) SEAMLESS	P235GH/1.0305/A106	1960,8 mm	2/393	
CA-65-D16A-ROD.80	CA	BE	D16A	65	MM	2,90 mm	DIN EN 10216-1 (DIN 2448) SEAMLESS	P235GH/1.0305/A106	9295,2 mm	49/076	
CA-50-D16A-ROD.30	CA	PE	D16A	50	MM	3,65 mm	DIN EN 10255 (DIN 2440) SEAMLESS	P235GH/1.0305/A106	291,6 mm	1/488	
CA-50-D16A-ROD.89	CA	PE	D16A	50	MM	3,65 mm	DIN EN 10255 (DIN 2440) SEAMLESS	P235GH/1.0305/A106	21951,6 mm	111/952	
CA-50-D16A-ROD.89	CA	PE	D16A	50	MM	3,65 mm	DIN EN 10255 (DIN 2440) SEAMLESS	P235GH/1.0305/A106	324 mm	1/655	
CA-50-D16A-ROD.89	CA	PE	D16A	50	MM	3,65 mm	DIN EN 10255 (DIN 2440) SEAMLESS	P235GH/1.0305/A106	6969,6 mm	35/544	
CA-50-D16A-ROD.89	CA	PE	D16A	50	MM	3,65 mm	DIN EN 10255 (DIN 2440) SEAMLESS	P235GH/1.0305/A106	324 mm	1/655	
CA-50-D16A-ROD.89	CA	PE	D16A	50	MM	3,65 mm	DIN EN 10255 (DIN 2440) SEAMLESS	P235GH/1.0305/A106	324 mm	1/655	
CA-50-D16A-ROD.89	CA	PE	D16A	50	MM	3,65 mm	DIN EN 10255 (DIN 2440) SEAMLESS	P235GH/1.0305/A106	324 mm	1/655	
CA-50-D16A-ROD.89	CA	PE	D16A	50	MM	3,65 mm	DIN EN 10255 (DIN 2440) SEAMLESS	P235GH/1.0305/A106	2568 mm	13/099	
CA-50-D16A-ROD.89	CA	PE	D16A	50	MM	3,65 mm	DIN EN 10255 (DIN 2440) SEAMLESS	P235GH/1.0305/A106	3110,4 mm	15/865	
CA-50-D16A-ROD.89	CA	PE	D16A	50	MM	3,65 mm	DIN EN 10255 (DIN 2440) SEAMLESS	P235GH/1.0305/A106	76,8 mm	0/394	
CA-20-D16A-ROD.100	CA	PE	D16A	20	MM	2,65 mm	DIN EN 10255 (DIN 2440) SEAMLESS	P235GH/1.0305/A106	268,8 mm	0/425	

PIPE TAG	TYPE OF FLUID	CONNECTION	SPECI.	DN	UNITS	THICKNESS(mm)	NORMATIVE	MATERIAL	LENGHT	WEIGHT (Kg)	PRICE
CA-20-D16A-ROD.100	CA	PE	D16A	20	MM	2,65 mm	DIN EN 10255 (DIN 2440) SEAMLESS	P235GH/1.0305/A106	2497,2 mm	3/946	
CA-20-D16A-ROD.99	CA	PE	D16A	20	MM	2,65 mm	DIN EN 10255 (DIN 2440) SEAMLESS	P235GH/1.0305/A106	268,8 mm	0/425	
CA-20-D16A-ROD.99	CA	PE	D16A	20	MM	2,65 mm	DIN EN 10255 (DIN 2440) SEAMLESS	P235GH/1.0305/A106	2497,2 mm	3/946	
CA-50-D16A-ROD.89	CA	PE	D16A	50	MM	3,65 mm	DIN EN 10255 (DIN 2440) SEAMLESS	P235GH/1.0305/A106	420 mm	2/142	
CA-50-D16A-ROD.89	CA	PE	D16A	50	MM	3,65 mm	DIN EN 10255 (DIN 2440) SEAMLESS	P235GH/1.0305/A106	496,8 mm	2/534	
CA-50-D16A-ROD.89	CA	PE	D16A	50	MM	3,65 mm	DIN EN 10255 (DIN 2440) SEAMLESS	P235GH/1.0305/A106	3847,2 mm	19/619	
CA-50-D16A-ROD.89	CA	PE	D16A	50	MM	3,65 mm	DIN EN 10255 (DIN 2440) SEAMLESS	P235GH/1.0305/A106	13972,8 mm	71/263	
CA-50-D16A-ROD.89	CA	PE	D16A	20	MM	2,65 mm	DIN EN 10255 (DIN 2440) SEAMLESS	P235GH/1.0305/A106	120 mm	0/190	
CA-65-D16A-ROD.98	CA	BE	D16A	65	MM	2,90 mm	DIN EN 10216-1 (DIN 2448) SEAMLESS	P235GH/1.0305/A106	10011,6 mm	52/861	
CA-65-D16A-ROD.98	CA	BE	D16A	65	MM	2,90 mm	DIN EN 10216-1 (DIN 2448) SEAMLESS	P235GH/1.0305/A106	1094,4 mm	5/778	
CA-50-D16A-ROD.89	CA	PE	D16A	50	MM	3,65 mm	DIN EN 10255 (DIN 2440) SEAMLESS	P235GH/1.0305/A106	3942 mm	20/104	
CA-50-D16A-ROD.89	CA	PE	D16A	50	MM	3,65 mm	DIN EN 10255 (DIN 2440) SEAMLESS	P235GH/1.0305/A106	14802 mm	75/493	
CA-50-D16A-ROD.89	CA	PE	D16A	50	MM	3,65 mm	DIN EN 10255 (DIN 2440) SEAMLESS	P235GH/1.0305/A106	4279,2 mm	21/825	
CA-50-D16A-ROD.89	CA	PE	D16A	50	MM	3,65 mm	DIN EN 10255 (DIN 2440) SEAMLESS	P235GH/1.0305/A106	302,4 mm	1/544	
CA-65-D16A-ROD.98	CA	BE	D16A	65	MM	2,90 mm	DIN EN 10216-1 (DIN 2448) SEAMLESS	P235GH/1.0305/A106	5743,2 mm	30/325	
CA-65-D16A-ROD.98	CA	BE	D16A	65	MM	2,90 mm	DIN EN 10216-1 (DIN 2448) SEAMLESS	P235GH/1.0305/A106	18165,6 mm	95/917	
CA-65-D16A-ROD.98	CA	BE	D16A	65	MM	2,90 mm	DIN EN 10216-1 (DIN 2448) SEAMLESS	P235GH/1.0305/A106	96 mm	0/508	
CA-65-D16A-ROD.98	CA	BE	D16A	65	MM	2,90 mm	DIN EN 10216-1 (DIN 2448) SEAMLESS	P235GH/1.0305/A106	8433,6 mm	44/529	
CA-65-D16A-ROD.98	CA	BE	D16A	65	MM	2,90 mm	DIN EN 10216-1 (DIN 2448) SEAMLESS	P235GH/1.0305/A106	24304,8 mm	128/332	
CA-65-D16A-ROD.98	CA	BE	D16A	65	MM	2,90 mm	DIN EN 10216-1 (DIN 2448) SEAMLESS	P235GH/1.0305/A106	23557,2 mm	124/379	
CA-20-D16A-ROD.91	CA	PE	D16A	20	MM	2,65 mm	DIN EN 10255 (DIN 2440) SEAMLESS	P235GH/1.0305/A106	1599,6 mm	2/528	
CA-50-D16A-ROD.89	CA	PE	D16A	50	MM	3,65 mm	DIN EN 10255 (DIN 2440) SEAMLESS	P235GH/1.0305/A106	6882 mm	35/096	
CA-32-D16A-ROD.90	CA	PE	D16A	32	MM	3,25 mm	DIN EN 10255 (DIN 2440) SEAMLESS	P235GH/1.0305/A106	7191,6 mm	22/581	
CA-50-D16A-ROD.89	CA	PE	D16A	32	MM	3,25 mm	DIN EN 10255 (DIN 2440) SEAMLESS	P235GH/1.0305/A106	120 mm	0/377	
CA-32-D16A-ROD.90	CA	PE	D16A	32	MM	3,25 mm	DIN EN 10255 (DIN 2440) SEAMLESS	P235GH/1.0305/A106	759,6 mm	2/385	
CA-32-D16A-ROD.90	CA	PE	D16A	32	MM	3,25 mm	DIN EN 10255 (DIN 2440) SEAMLESS	P235GH/1.0305/A106	734,4 mm	2/305	
CA-20-D16A-ROD.91	CA	PE	D16A	20	MM	2,65 mm	DIN EN 10255 (DIN 2440) SEAMLESS	P235GH/1.0305/A106	518,4 mm	0/820	
CA-32-D16A-ROD.90	CA	PE	D16A	32	MM	3,25 mm	DIN EN 10255 (DIN 2440) SEAMLESS	P235GH/1.0305/A106	1618,8 mm	5/085	
CA-50-D16A-ROD.89	CA	PE	D16A	50	MM	3,65 mm	DIN EN 10255 (DIN 2440) SEAMLESS	P235GH/1.0305/A106	11974,8 mm	61/071	
CA-20-D16A-ROD.91	CA	PE	D16A	20	MM	2,65 mm	DIN EN 10255 (DIN 2440) SEAMLESS	P235GH/1.0305/A106	1117,2 mm	1/765	
CA-50-D16A-ROD.89	CA	PE	D16A	20	MM	2,65 mm	DIN EN 10255 (DIN 2440) SEAMLESS	P235GH/1.0305/A106	120 mm	0/190	
CA-32-D16A-ROD.90	CA	PE	D16A	32	MM	3,25 mm	DIN EN 10255 (DIN 2440) SEAMLESS	P235GH/1.0305/A106	254,4 mm	0/799	
CA-32-D16A-ROD.90	CA	PE	D16A	32	MM	3,25 mm	DIN EN 10255 (DIN 2440) SEAMLESS	P235GH/1.0305/A106	331,2 mm	1/042	
CA-50-D16A-ROD.89	CA	PE	D16A	50	MM	3,65 mm	DIN EN 10255 (DIN 2440) SEAMLESS	P235GH/1.0305/A106	337,2 mm	1/722	
CA-50-D16A-ROD.89	CA	PE	D16A	20	MM	2,65 mm	DIN EN 10255 (DIN 2440) SEAMLESS	P235GH/1.0305/A106	120 mm	0/190	
CA-50-D16A-ROD.89	CA	PE	D16A	20	MM	2,65 mm	DIN EN 10255 (DIN 2440) SEAMLESS	P235GH/1.0305/A106	120 mm	0/190	
CA-50-D16A-ROD.89	CA	PE	D16A	20	MM	2,65 mm	DIN EN 10255 (DIN 2440) SEAMLESS	P235GH/1.0305/A106	120 mm	0/190	
CA-32-D16A-ROD.90	CA	PE	D16A	32	MM	3,25 mm	DIN EN 10255 (DIN 2440) SEAMLESS	P235GH/1.0305/A106	787,2 mm	2/472	
CA-50-D16A-ROD.89	CA	PE	D16A	50	MM	3,65 mm	DIN EN 10255 (DIN 2440) SEAMLESS	P235GH/1.0305/A106	710,4 mm	3/623	
CA-65-D16A-ROD.98	CA	PE	D16A	20	MM	2,65 mm	DIN EN 10255 (DIN 2440) SEAMLESS	P235GH/1.0305/A106	2238 mm	3/535	
CA-65-D16A-ROD.98	CA	PE	D16A	20	MM	2,65 mm	DIN EN 10255 (DIN 2440) SEAMLESS	P235GH/1.0305/A106	2457,6 mm	3/884	
CA-65-D16A-ROD.98	CA	BE	D16A	65	MM	2,90 mm	DIN EN 10216-1 (DIN 2448) SEAMLESS	P235GH/1.0305/A106	6625,2 mm	34/979	
CA-65-D16A-ROD.98	CA	PE	D16A	20	MM	2,65 mm	DIN EN 10255 (DIN 2440) SEAMLESS	P235GH/1.0305/A106	2468,4 mm	3/899	
CA-65-D16A-ROD.98	CA	PE	D16A	20	MM	2,65 mm	DIN EN 10255 (DIN 2440) SEAMLESS	P235GH/1.0305/A106	2468,4 mm	3/899	
CA-65-D16A-ROD.98	CA	PE	D16A	20	MM	2,65 mm	DIN EN 10255 (DIN 2440) SEAMLESS	P235GH/1.0305/A106	2442 mm	3/858	
CA-65-D16A-ROD.98	CA	BE	D16A	65	MM	2,90 mm	DIN EN 10216-1 (DIN 2448) SEAMLESS	P235GH/1.0305/A106	8457,6 mm	44/656	
CA-65-D16A-ROD.98	CA	PE	D16A	20	MM	2,65 mm	DIN EN 10255 (DIN 2440) SEAMLESS	P235GH/1.0305/A106	2468,4 mm	3/899	
CA-65-D16A-ROD.98	CA	PE	D16A	20	MM	2,65 mm	DIN EN 10255 (DIN 2440) SEAMLESS	P235GH/1.0305/A106	2584,8 mm	4/084	

PIPE TAG	TYPE OF FLUID	CONNECTION	SPECI.	DN	UNITS	THICKNESS(mm)	NORMATIVE	MATERIAL	LENGHT	WEIGHT (Kg)	PRICE
CA-65-D16A-ROD.98	CA	PE	D16A	20	MM	2,65 mm	DIN EN 10255 (DIN 2440) SEAMLESS	P235GH/1.0305/A106	2468,4 mm	3/899	
CA-65-D16A-ROD.98	CA	PE	D16A	20	MM	2,65 mm	DIN EN 10255 (DIN 2440) SEAMLESS	P235GH/1.0305/A106	2238 mm	3/535	
CA-65-D16A-ROD.98	CA	PE	D16A	20	MM	2,65 mm	DIN EN 10255 (DIN 2440) SEAMLESS	P235GH/1.0305/A106	2238 mm	3/535	
CA-65-D16A-ROD.98	CA	PE	D16A	20	MM	2,65 mm	DIN EN 10255 (DIN 2440) SEAMLESS	P235GH/1.0305/A106	2468,4 mm	3/899	
CA-65-D16A-ROD.98	CA	BE	D16A	65	MM	2,90 mm	DIN EN 10216-1 (DIN 2448) SEAMLESS	P235GH/1.0305/A106	5911,2 mm	31/212	
CA-65-D16A-ROD.98	CA	PE	D16A	20	MM	2,65 mm	DIN EN 10255 (DIN 2440) SEAMLESS	P235GH/1.0305/A106	1698 mm	2/682	
CA-65-D16A-ROD.98	CA	PE	D16A	20	MM	2,65 mm	DIN EN 10255 (DIN 2440) SEAMLESS	P235GH/1.0305/A106	2023,2 mm	3/197	

SUPPORTS AIR

SUPPORT TAG	PIPE TAG	DN	TYPE OF ELEMENT	STD (Acc: Doc. 85 09 06 U 8100 0 10 000 03)	DESCRIPTION	LENGTH (M)	QUANT.	WEIGHT	PRICE
CA-15-D16A-ROD.88/SP1	CA-15-D16A-ROD.88	15	L70x70x7		L70x70x7, Cut Length: 350 mm	0/398	1	2/56	
CA-15-D16A-ROD.88/SP1	CA-15-D16A-ROD.88	15	U BOLT		Lisega Size 400118 Metric U-Bolt		1	0/05	
CA-25-D16A-ROD.60/SP1-STD65	CA-25-D16A-ROD.60	25	L40x40x4	STD65	L40x40x4, Cut Length: 245,00 mm	0/245	1	0/58	
CA-25-D16A-ROD.60/SP1-STD65	CA-25-D16A-ROD.60	25	L40x40x4	STD65	L40x40x4, Cut Length: 245,00 mm	0/245	1	0/58	
CA-25-D16A-ROD.60/SP1-STD65	CA-25-D16A-ROD.60	25	U BOLT	STD65	Lisega Size 400118 Metric U-Bolt		1	0/05	
CA-25-D16A-ROD.60/SP2-STD65	CA-25-D16A-ROD.60	25	L40x40x4	STD65	L40x40x4, Cut Length: 245,00 mm	0/245	1	0/58	
CA-25-D16A-ROD.60/SP2-STD65	CA-25-D16A-ROD.60	25	L40x40x4	STD65	L40x40x4, Cut Length: 245,00 mm	0/245	1	0/58	
CA-25-D16A-ROD.60/SP2-STD65	CA-25-D16A-ROD.60	25	U BOLT	STD65	Lisega Size 400118 Metric U-Bolt		1	0/05	
CA-25-D16A-ROD.60/SP3-STD65	CA-25-D16A-ROD.60	25	L40x40x4	STD65	L40x40x4, Cut Length: 245 mm	0/245	1	0/58	
CA-25-D16A-ROD.60/SP3-STD65	CA-25-D16A-ROD.60	25	L40x40x4	STD65	L40x40x4, Cut Length: 245 mm	0/245	1	0/58	
CA-25-D16A-ROD.60/SP3-STD65	CA-25-D16A-ROD.60	25	U BOLT	STD65	Lisega Size 400118 Metric U-Bolt		1	0/05	
CA-25-D16A-ROD.60/SP4	CA-25-D16A-ROD.60	25	U BOLT		Lisega Size 400318 Metric U-Bolt		1	0/05	
CA-25-D16A-ROD.60/SP5	CA-25-D16A-ROD.60	25	U BOLT		Lisega Size 400318 Metric U-Bolt		1	0/05	
CA-25-D16A-ROD.60/SP6	CA-25-D16A-ROD.60	25	L70x70x7		L70x70x7, Cut Length: 300 mm	0/348	1	2/19	
CA-25-D16A-ROD.60/SP6	CA-25-D16A-ROD.60	25	U BOLT		Lisega Size 400318 Metric U-Bolt		1	0/05	
CA-25-D16A-ROD.60/SP7	CA-25-D16A-ROD.60	25	L70x70x7		L70x70x7, Cut Length: 300 mm	0/348	1	2/19	
CA-25-D16A-ROD.60/SP7	CA-25-D16A-ROD.60	25	U BOLT		Lisega Size 400318 Metric U-Bolt		1	0/05	
CA-25-D16A-ROD.68/SP2	CA-25-D16A-ROD.68	25	U BOLT		Lisega Size 400318 Metric U-Bolt		1	0/05	
CA-25-D16A-ROD.68/SP4	CA-25-D16A-ROD.68	25	U BOLT		Lisega Size 400318 Metric U-Bolt		1	0/05	
CA-25-D16A-ROD.69/SP1	CA-25-D16A-ROD.69	25	L70x70x7		L70x70x7, Cut Length: 350 mm	0/350	1	2/56	
CA-25-D16A-ROD.69/SP1	CA-25-D16A-ROD.69	25	U BOLT		Lisega Size 400318 Metric U-Bolt		1	0/05	
CA-25-D16A-ROD.69/SP2	CA-25-D16A-ROD.69	25	L70x70x7		L70x70x7, Cut Length: 350 mm	0/350	1	2/56	
CA-25-D16A-ROD.69/SP2	CA-25-D16A-ROD.69	25	U BOLT		Lisega Size 400318 Metric U-Bolt		1	0/05	
CA-25-D16A-ROD.69/SP3	CA-25-D16A-ROD.69	25	L70x70x7		L70x70x7, Cut Length: 350 mm	0/350	1	2/56	
CA-25-D16A-ROD.69/SP3	CA-25-D16A-ROD.69	25	U BOLT		Lisega Size 400318 Metric U-Bolt		1	0/05	
CA-25-D16A-ROD.69/SP4	CA-25-D16A-ROD.69	25	U BOLT		Lisega Size 400318 Metric U-Bolt		1	0/05	
CA-25-D16A-ROD.83/SP1	CA-25-D16A-ROD.83	25	U BOLT		Lisega Size 400318 Metric U-Bolt		1	0/05	
CA-25-D16A-ROD.83/SP2	CA-25-D16A-ROD.83	25	L70x70x7		L70x70x7, Cut Length: 120 mm	0/168	1	0/88	
CA-25-D16A-ROD.83/SP2	CA-25-D16A-ROD.83	25	U BOLT		Lisega Size 400318 Metric U-Bolt		1	0/05	
CA-25-D16A-ROD.83/SP3	CA-25-D16A-ROD.83	25	L70x70x7		L70x70x7, Cut Length: 120 mm	0/168	1	0/88	
CA-25-D16A-ROD.83/SP3	CA-25-D16A-ROD.83	25	U BOLT		Lisega Size 400318 Metric U-Bolt		1	0/05	
CA-32-D16A-ROD.81/SP1	CA-32-D16A-ROD.81	32	L70x70x7		L70x70x7, Cut Length: 200 mm	0/248	1	1/46	
CA-32-D16A-ROD.81/SP1	CA-32-D16A-ROD.81	32	U BOLT		Lisega Size 400418 Metric U-Bolt		1	0/15	
CA-32-D16A-ROD.81/SP2	CA-32-D16A-ROD.81	32	L70x70x7		L70x70x7, Cut Length: 200 mm	0/248	1	1/46	
CA-32-D16A-ROD.81/SP2	CA-32-D16A-ROD.81	32	U BOLT		Lisega Size 400418 Metric U-Bolt		1	0/15	
CA-32-D16A-ROD.81/SP4	CA-32-D16A-ROD.81	32	L70x70x7		L70x70x7, Cut Length: 120 mm	0/168	1	0/88	
CA-32-D16A-ROD.81/SP4	CA-32-D16A-ROD.81	32	U BOLT		Lisega Size 400418 Metric U-Bolt		1	0/15	
CA-32-D16A-ROD.81/SP5	CA-32-D16A-ROD.81	32	L70x70x7		L70x70x7, Cut Length: 120 mm	0/168	1	0/88	
CA-32-D16A-ROD.81/SP5	CA-32-D16A-ROD.81	32	U BOLT		Lisega Size 400418 Metric U-Bolt		1	0/15	
CA-32-D16A-ROD.82/SP1	CA-32-D16A-ROD.82	32	U BOLT		Lisega Size 400418 Metric U-Bolt		1	0/15	
CA-40-D16A-ROD.62/SP10	CA-40-D16A-ROD.62	40	L70x70x7		L70x70x7, Cut Length: 250 mm	0/298	1	1/83	
CA-40-D16A-ROD.62/SP10	CA-40-D16A-ROD.62	40	U BOLT		Lisega Size 400518 Metric U-Bolt		1	0/16	
CA-40-D16A-ROD.62/SP11	CA-40-D16A-ROD.62	40	L70x70x7		L70x70x7, Cut Length: 250 mm	0/298	1	1/83	
CA-40-D16A-ROD.62/SP12	CA-40-D16A-ROD.62	40	L70x70x7		L70x70x7, Cut Length: 250 mm	0/298	1	1/83	
CA-40-D16A-ROD.62/SP13	CA-40-D16A-ROD.62	40	L70x70x7		L70x70x7, Cut Length: 250 mm	0/298	1	1/83	
CA-40-D16A-ROD.62/SP13	CA-40-D16A-ROD.62	40	U BOLT		Lisega Size 400518 Metric U-Bolt		1	0/16	
CA-40-D16A-ROD.62/SP14	CA-40-D16A-ROD.62	40	L70x70x7		L70x70x7, Cut Length: 250 mm	0/298	1	1/83	
CA-40-D16A-ROD.62/SP15	CA-40-D16A-ROD.62	40	L70x70x7		L70x70x7, Cut Length: 250 mm	0/298	1	1/83	
CA-40-D16A-ROD.62/SP16	CA-40-D16A-ROD.62	40	L70x70x7		L70x70x7, Cut Length: 250 mm	0/298	1	1/83	
CA-40-D16A-ROD.62/SP16	CA-40-D16A-ROD.62	40	U BOLT		Lisega Size 400518 Metric U-Bolt		1	0/16	
CA-40-D16A-ROD.62/SP17	CA-40-D16A-ROD.62	40	L70x70x7		L70x70x7, Cut Length: 250 mm	0/298	1	1/83	
CA-40-D16A-ROD.62/SP1-STD59	CA-40-D16A-ROD.62	40	L40x40x4	STD59	L40x40x4, Cut Length: 225,00 mm	0/225	1	0/54	
CA-40-D16A-ROD.62/SP1-STD59	CA-40-D16A-ROD.62	40	U BOLT	STD59	Lisega Size 400518 Metric U-Bolt		1	0/16	
CA-40-D16A-ROD.62/SP2-STD59	CA-40-D16A-ROD.62	40	L40x40x4	STD59	L40x40x4, Cut Length: 225,00 mm	0/225	1	0/54	
CA-40-D16A-ROD.62/SP2-STD59	CA-40-D16A-ROD.62	40	U BOLT	STD59	Lisega Size 400518 Metric U-Bolt		1	0/16	
CA-40-D16A-ROD.62/SP3	CA-40-D16A-ROD.62	40	L70x70x7		L70x70x7, Cut Length: 250 mm	0/298	1	1/83	
CA-40-D16A-ROD.62/SP3	CA-40-D16A-ROD.62	40	U BOLT		Lisega Size 400518 Metric U-Bolt		1	0/16	
CA-40-D16A-ROD.62/SP4	CA-40-D16A-ROD.62	40	L70x70x7		L70x70x7, Cut Length: 250 mm	0/298	1	1/83	

SUPPORT TAG	PIPE TAG	DN	TYPE OF ELEMENT	STD (Acc: Doc. 85 09 06 U 8100 0 10 000 03)	DESCRIPTION	LENGTH (M)	QUANT.	WEIGHT	PRICE
CA-40-D16A-ROD.62/SP4	CA-40-D16A-ROD.62	40	U BOLT		Lisega Size 400518 Metric U-Bolt		1	0/16	
CA-40-D16A-ROD.62/SP5	CA-40-D16A-ROD.62	40	L70x70x7		L70x70x7, Cut Length: 250 mm	0/298	1	1/83	
CA-40-D16A-ROD.62/SP6	CA-40-D16A-ROD.62	40	L70x70x7		L70x70x7, Cut Length: 250 mm	0/298	1	1/83	
CA-40-D16A-ROD.62/SP7	CA-40-D16A-ROD.62	40	L70x70x7		L70x70x7, Cut Length: 250 mm	0/298	1	1/83	
CA-40-D16A-ROD.62/SP7	CA-40-D16A-ROD.62	40	U BOLT		Lisega Size 400518 Metric U-Bolt		1	0/16	
CA-40-D16A-ROD.62/SP8	CA-40-D16A-ROD.62	40	L70x70x7		L70x70x7, Cut Length: 250 mm	0/298	1	1/83	
CA-40-D16A-ROD.62/SP9	CA-40-D16A-ROD.62	40	L70x70x7		L70x70x7, Cut Length: 250 mm	0/298	1	1/83	
CA-40-D16A-ROD.84/SP1-STD118	CA-40-D16A-ROD.84	40	L70x70x7	STD118	L70x70x7, Cut Length: 230 mm	0/230	1	1/68	
CA-40-D16A-ROD.84/SP1-STD118	CA-40-D16A-ROD.84	40	U BOLT	STD118	Lisega Size 400518 Metric U-Bolt		1	0/16	
CA-40-D16A-ROD.84/SP1-STD118	CA-40-D16A-ROD.84	40	EXPANSION BOLT (TYPE HILTI HAS/HAS-E rod adhesive anchor M12)	STD118	HILTI DIMENISONS 12 mm dia x 110 mm long cylinder		1	0/01	
CA-40-D16A-ROD.84/SP1-STD118	CA-40-D16A-ROD.84	40	EXPANSION BOLT (TYPE HILTI HAS/HAS-E rod adhesive anchor M12)	STD118	HILTI DIMENISONS 12 mm dia x 110 mm long cylinder		1	0/01	
CA-40-D16A-ROD.84/SP1-STD118	CA-40-D16A-ROD.84	40	PLATE WITH HOLES (ACCORDING TO SUPPORT STANDARD)	STD118	10 mm Plate Steel, 230 mm x 100 mm		1	1/82	
CA-50-D16A-ROD.30/SP1-STD59	CA-50-D16A-ROD.30	50	L40x40x4	STD59	L40x40x4, Cut Length: 225,00 mm	0/225	1	0/54	
CA-50-D16A-ROD.30/SP1-STD59	CA-50-D16A-ROD.30	50	L40x40x4	STD59	L40x40x4, Cut Length: 225 mm	0/225	1	0/54	
CA-50-D16A-ROD.30/SP1-STD59	CA-50-D16A-ROD.30	50	U BOLT	STD59	Lisega Size 400618 Metric U-Bolt		1	0/18	
CA-50-D16A-ROD.30/SP1-STD59	CA-50-D16A-ROD.30	40	U BOLT	STD59	Lisega Size 400518 Metric U-Bolt		1	0/16	
CA-50-D16A-ROD.30/SP2-STD59	CA-50-D16A-ROD.30	50	L40x40x4	STD59	L40x40x4, Cut Length: 225,00 mm	0/225	1	0/54	
CA-50-D16A-ROD.30/SP2-STD59	CA-50-D16A-ROD.30	50	L40x40x4	STD59	L40x40x4, Cut Length: 225 mm	0/225	1	0/54	
CA-50-D16A-ROD.30/SP2-STD59	CA-50-D16A-ROD.30	50	U BOLT	STD59	Lisega Size 400618 Metric U-Bolt		1	0/18	
CA-50-D16A-ROD.30/SP2-STD59	CA-50-D16A-ROD.30	40	U BOLT	STD59	Lisega Size 400518 Metric U-Bolt		1	0/16	
CA-50-D16A-ROD.30/SP3	CA-50-D16A-ROD.30	50	L40x40x4		L40x40x4, Cut Length: 225 mm	0/225	1	0/54	
CA-50-D16A-ROD.30/SP3	CA-50-D16A-ROD.30	50	L70x70x7		L70x70x7, Cut Length: 495 mm	0/543	1	3/62	
CA-50-D16A-ROD.30/SP3	CA-50-D16A-ROD.30	50	U BOLT		Lisega Size 400618 Metric U-Bolt		1	0/18	
CA-50-D16A-ROD.30/SP3	CA-50-D16A-ROD.30	32	U BOLT		Lisega Size 400418 Metric U-Bolt		1	0/15	
CA-50-D16A-ROD.30/SP4	CA-50-D16A-ROD.30	50	L40x40x4		L40x40x4, Cut Length: 225 mm	0/225	1	0/54	
CA-50-D16A-ROD.30/SP4	CA-50-D16A-ROD.30	50	U BOLT		Lisega Size 400618 Metric U-Bolt		1	0/18	
CA-50-D16A-ROD.30/SP4-STD138	CA-50-D16A-ROD.30	50	L70x70x7	STD138	L70x70x7, Cut Length: 480 mm	0/480	1	3/51	
CA-50-D16A-ROD.30/SP4-STD138	CA-50-D16A-ROD.30	40	U BOLT	STD138	Lisega Size 400518 Metric U-Bolt		1	0/16	
CA-50-D16A-ROD.30/SP4-STD138	CA-50-D16A-ROD.30	50	EXPANSION BOLT (TYPE HILTI HAS/HAS-E rod adhesive anchor M12)	STD138	HILTI DIMENISONS 12 mm dia x 110 mm long cylinder		1	0/01	
CA-50-D16A-ROD.30/SP4-STD138	CA-50-D16A-ROD.30	50	EXPANSION BOLT (TYPE HILTI HAS/HAS-E rod adhesive anchor M12)	STD138	HILTI DIMENISONS 12 mm dia x 110 mm long cylinder		1	0/01	
CA-50-D16A-ROD.30/SP4-STD138	CA-50-D16A-ROD.30	50	PLATE WITH HOLES (ACCORDING TO SUPPORT STANDARD)	STD138	10 mm Plate Steel, 230 mm x 100 mm		1	1/82	
CA-50-D16A-ROD.30/SP5-STD138	CA-50-D16A-ROD.30	50	L70x70x7	STD138	L70x70x7, Cut Length: 480 mm	0/480	1	3/51	
CA-50-D16A-ROD.30/SP5-STD138	CA-50-D16A-ROD.30	40	U BOLT	STD138	Lisega Size 400518 Metric U-Bolt		1	0/16	
CA-50-D16A-ROD.30/SP5-STD138	CA-50-D16A-ROD.30	50	EXPANSION BOLT (TYPE HILTI HAS/HAS-E rod adhesive anchor M12)	STD138	HILTI DIMENISONS 12 mm dia x 110 mm long cylinder		1	0/01	
CA-50-D16A-ROD.30/SP5-STD138	CA-50-D16A-ROD.30	50	EXPANSION BOLT (TYPE HILTI HAS/HAS-E rod adhesive anchor M12)	STD138	HILTI DIMENISONS 12 mm dia x 110 mm long cylinder		1	0/01	
CA-50-D16A-ROD.30/SP5-STD138	CA-50-D16A-ROD.30	50	PLATE WITH HOLES (ACCORDING TO SUPPORT STANDARD)	STD138	10 mm Plate Steel, 230 mm x 100 mm		1	1/82	
CA-50-D16A-ROD.30/SP6	CA-50-D16A-ROD.30	50	L70x70x7		L70x70x7, Cut Length: 495 mm	0/543	1	3/62	
CA-50-D16A-ROD.30/SP6	CA-50-D16A-ROD.30	32	U BOLT		Lisega Size 400418 Metric U-Bolt		1	0/15	
CA-65-D16A-ROD.79/SP1	CA-65-D16A-ROD.79	65	L70x70x7		L70x70x7, Cut Length: 250 mm	0/298	1	1/83	
CA-65-D16A-ROD.79/SP1	CA-65-D16A-ROD.79	65	U BOLT		Lisega Size 400718 Metric U-Bolt		1	0/30	
CA-65-D16A-ROD.79/SP10	CA-65-D16A-ROD.79	65	L70x70x7		L70x70x7, Cut Length: 450 mm	0/498	1	3/29	
CA-65-D16A-ROD.79/SP10	CA-65-D16A-ROD.79	65	U BOLT		Lisega Size 400718 Metric U-Bolt		1	0/30	
CA-65-D16A-ROD.79/SP2	CA-65-D16A-ROD.79	65	L70x70x7		L70x70x7, Cut Length: 250 mm	0/298	1	1/83	
CA-65-D16A-ROD.79/SP2	CA-65-D16A-ROD.79	65	U BOLT		Lisega Size 400718 Metric U-Bolt		1	0/30	
CA-65-D16A-ROD.79/SP3	CA-65-D16A-ROD.79	65	U BOLT		Lisega Size 400718 Metric U-Bolt		1	0/30	
CA-65-D16A-ROD.79/SP4-STD137	CA-65-D16A-ROD.79	65	L70x70x7	STD137	L70x70x7, Cut Length: 525 mm	0/573	1	3/84	
CA-65-D16A-ROD.79/SP4-STD137	CA-65-D16A-ROD.79	65	L70x70x7	STD137	L70x70x7, Cut Length: 180 mm	0/228	1	1/32	
CA-65-D16A-ROD.79/SP4-STD137	CA-65-D16A-ROD.79	65	U BOLT	STD137	Lisega Size 400718 Metric U-Bolt		1	0/30	
CA-65-D16A-ROD.79/SP4-STD137	CA-65-D16A-ROD.79	65	EXPANSION BOLT (TYPE HILTI HAS/HAS-E rod adhesive anchor M12)	STD137	HILTI DIMENISONS 12 mm dia x 110 mm long cylinder		1	0/01	
CA-65-D16A-ROD.79/SP4-STD137	CA-65-D16A-ROD.79	65	EXPANSION BOLT (TYPE HILTI HAS/HAS-E rod adhesive anchor M12)	STD137	HILTI DIMENISONS 12 mm dia x 110 mm long cylinder		1	0/01	
CA-65-D16A-ROD.79/SP4-STD137	CA-65-D16A-ROD.79	65	PLATE WITH HOLES (ACCORDING TO SUPPORT STANDARD)	STD137	10 mm Plate Steel, 230 mm x 100 mm		1	1/82	
CA-65-D16A-ROD.79/SP5	CA-65-D16A-ROD.79	65	L70x70x7		L70x70x7, Cut Length: 350 mm	0/398	1	2/56	
CA-65-D16A-ROD.79/SP5	CA-65-D16A-ROD.79	65	U BOLT		Lisega Size 400718 Metric U-Bolt		1	0/30	
CA-65-D16A-ROD.79/SP6	CA-65-D16A-ROD.79	65	L70x70x7		L70x70x7, Cut Length: 350 mm	0/398	1	2/56	
CA-65-D16A-ROD.79/SP6	CA-65-D16A-ROD.79	65	U BOLT		Lisega Size 400718 Metric U-Bolt		1	0/30	
CA-65-D16A-ROD.79/SP7	CA-65-D16A-ROD.79	65	L70x70x7		L70x70x7, Cut Length: 400 mm	0/448	1	2/92	
CA-65-D16A-ROD.79/SP7	CA-65-D16A-ROD.79	65	U BOLT		Lisega Size 400718 Metric U-Bolt		1	0/30	
CA-65-D16A-ROD.79/SP8	CA-65-D16A-ROD.79	65	L70x70x7		L70x70x7, Cut Length: 400 mm	0/448	1	2/92	

SUPPORT TAG	PIPE TAG	DN	TYPE OF ELEMENT	STD (Acc: Doc. 85 09 06 U 8100 0 10 000 03)	DESCRIPTION	LENGTH (M)	QUANT.	WEIGHT	PRICE
CA-65-D16A-ROD.79/SP8	CA-65-D16A-ROD.79	65	U BOLT		Lisega Size 400718 Metric U-Bolt		1	0/30	
CA-65-D16A-ROD.79/SP9	CA-65-D16A-ROD.79	65	L70x70x7		L70x70x7, Cut Length: 450 mm	0/498	1	3/29	
CA-65-D16A-ROD.79/SP9	CA-65-D16A-ROD.79	65	U BOLT		Lisega Size 400718 Metric U-Bolt		1	0/30	
CA-65-D16A-ROD.80/SP1	CA-65-D16A-ROD.80	65	L70x70x7		L70x70x7, Cut Length: 250 mm	0/298	1	1/83	
CA-65-D16A-ROD.80/SP1	CA-65-D16A-ROD.80	65	U BOLT		Lisega Size 400718 Metric U-Bolt		1	0/30	
CA-65-D16A-ROD.80/SP2	CA-65-D16A-ROD.80	65	L70x70x7		L70x70x7, Cut Length: 250 mm	0/298	1	1/83	
CA-65-D16A-ROD.80/SP2	CA-65-D16A-ROD.80	65	U BOLT		Lisega Size 400718 Metric U-Bolt		1	0/30	
CA-65-D16A-ROD.80/SP3	CA-65-D16A-ROD.80	65	L70x70x7		L70x70x7, Cut Length: 250 mm	0/298	1	1/83	
CA-65-D16A-ROD.80/SP3	CA-65-D16A-ROD.80	65	U BOLT		Lisega Size 400718 Metric U-Bolt		1	0/30	
CA-20-D16A-ROD.100/SP1	CA-20-D16A-ROD.100	20	L40x40x4		L40x40x4, Cut Length: 130 mm	0/130	1	0/31	
CA-20-D16A-ROD.100/SP1	CA-20-D16A-ROD.100	20	U BOLT		Lisega Size 400218 Metric U-Bolt		1	0/05	
CA-20-D16A-ROD.91/SP1	CA-20-D16A-ROD.91	20	U BOLT		Lisega Size 400218 Metric U-Bolt		1	0/05	
CA-20-D16A-ROD.99/SP1	CA-20-D16A-ROD.99	20	L40x40x4		L40x40x4, Cut Length: 130 mm	0/130	1	0/31	
CA-20-D16A-ROD.99/SP1	CA-20-D16A-ROD.99	20	U BOLT		Lisega Size 400218 Metric U-Bolt		1	0/05	
CA-32-D16A-ROD.90/SP1	CA-32-D16A-ROD.90	32	L40x40x4		L40x40x4, Cut Length: 190 mm	0/190	1	0/45	
CA-32-D16A-ROD.90/SP1	CA-32-D16A-ROD.90	32	U BOLT		Lisega Size 400418 Metric U-Bolt		1	0/15	
CA-32-D16A-ROD.90/SP2	CA-32-D16A-ROD.90	32	L40x40x4		L40x40x4, Cut Length: 190 mm	0/190	1	0/45	
CA-32-D16A-ROD.90/SP2	CA-32-D16A-ROD.90	32	U BOLT		Lisega Size 400418 Metric U-Bolt		1	0/15	
CA-32-D16A-ROD.90/SP3	CA-32-D16A-ROD.90	32	L40x40x4		L40x40x4, Cut Length: 190 mm	0/190	1	0/45	
CA-32-D16A-ROD.90/SP3	CA-32-D16A-ROD.90	32	U BOLT		Lisega Size 400418 Metric U-Bolt		1	0/15	
CA-50-D16A-ROD.89/SP1	CA-50-D16A-ROD.89	50	L70x70x7		L70x70x7, Cut Length: 250 mm	0/298	1	1/83	
CA-50-D16A-ROD.89/SP1	CA-50-D16A-ROD.89	50	U BOLT		Lisega Size 400618 Metric U-Bolt		1	0/18	
CA-50-D16A-ROD.89/SP10	CA-50-D16A-ROD.89	50	L70x70x7		L70x70x7, Cut Length: 145 mm	0/213	1	1/06	
CA-50-D16A-ROD.89/SP11	CA-50-D16A-ROD.89	50	L70x70x7		L70x70x7, Cut Length: 145 mm	0/213	1	1/06	
CA-50-D16A-ROD.89/SP11	CA-50-D16A-ROD.89	40	U BOLT		Lisega Size 400518 Metric U-Bolt		1	0/16	
CA-50-D16A-ROD.89/SP12	CA-50-D16A-ROD.89	50	L70x70x7		L70x70x7, Cut Length: 145 mm	0/213	1	1/06	
CA-50-D16A-ROD.89/SP12	CA-50-D16A-ROD.89	40	U BOLT		Lisega Size 400518 Metric U-Bolt		1	0/16	
CA-50-D16A-ROD.89/SP13	CA-50-D16A-ROD.89	50	L70x70x7		L70x70x7, Cut Length: 230 mm	0/298	1	1/68	
CA-50-D16A-ROD.89/SP13	CA-50-D16A-ROD.89	40	U BOLT		Lisega Size 400518 Metric U-Bolt		1	0/16	
CA-50-D16A-ROD.89/SP14	CA-50-D16A-ROD.89	50	L70x70x7		L70x70x7, Cut Length: 230 mm	0/298	1	1/68	
CA-50-D16A-ROD.89/SP15	CA-50-D16A-ROD.89	50	L70x70x7		L70x70x7, Cut Length: 230 mm	0/298	1	1/68	
CA-50-D16A-ROD.89/SP15	CA-50-D16A-ROD.89	40	U BOLT		Lisega Size 400518 Metric U-Bolt		1	0/16	
CA-50-D16A-ROD.89/SP16	CA-50-D16A-ROD.89	50	L70x70x7		L70x70x7, Cut Length: 230 mm	0/298	1	1/68	
CA-50-D16A-ROD.89/SP16	CA-50-D16A-ROD.89	40	U BOLT		Lisega Size 400518 Metric U-Bolt		1	0/16	
CA-50-D16A-ROD.89/SP17	CA-50-D16A-ROD.89	50	L70x70x7		L70x70x7, Cut Length: 230 mm	0/298	1	1/68	
CA-50-D16A-ROD.89/SP18	CA-50-D16A-ROD.89	50	L70x70x7		L70x70x7, Cut Length: 230 mm	0/298	1	1/68	
CA-50-D16A-ROD.89/SP18	CA-50-D16A-ROD.89	40	U BOLT		Lisega Size 400518 Metric U-Bolt		1	0/16	
CA-50-D16A-ROD.89/SP19	CA-50-D16A-ROD.89	50	L70x70x7		L70x70x7, Cut Length: 230 mm	0/298	1	1/68	
CA-50-D16A-ROD.89/SP19	CA-50-D16A-ROD.89	40	U BOLT		Lisega Size 400518 Metric U-Bolt		1	0/16	
CA-50-D16A-ROD.89/SP2	CA-50-D16A-ROD.89	50	L70x70x7		L70x70x7, Cut Length: 250 mm	0/298	1	1/83	
CA-50-D16A-ROD.89/SP2	CA-50-D16A-ROD.89	50	U BOLT		Lisega Size 400618 Metric U-Bolt		1	0/18	
CA-50-D16A-ROD.89/SP20	CA-50-D16A-ROD.89	50	L70x70x7		L70x70x7, Cut Length: 230 mm	0/298	1	1/68	
CA-50-D16A-ROD.89/SP21	CA-50-D16A-ROD.89	50	L70x70x7		L70x70x7, Cut Length: 230 mm	0/298	1	1/68	
CA-50-D16A-ROD.89/SP22	CA-50-D16A-ROD.89	50	L70x70x7		L70x70x7, Cut Length: 230 mm	0/298	1	1/68	
CA-50-D16A-ROD.89/SP22	CA-50-D16A-ROD.89	40	U BOLT		Lisega Size 400518 Metric U-Bolt		1	0/16	
CA-50-D16A-ROD.89/SP23	CA-50-D16A-ROD.89	50	L70x70x7		L70x70x7, Cut Length: 230 mm	0/298	1	1/68	
CA-50-D16A-ROD.89/SP24	CA-50-D16A-ROD.89	50	L70x70x7		L70x70x7, Cut Length: 230 mm	0/298	1	1/68	
CA-50-D16A-ROD.89/SP24	CA-50-D16A-ROD.89	40	U BOLT		Lisega Size 400518 Metric U-Bolt		1	0/16	
CA-50-D16A-ROD.89/SP25	CA-50-D16A-ROD.89	50	L70x70x7		L70x70x7, Cut Length: 230 mm	0/298	1	1/68	
CA-50-D16A-ROD.89/SP26	CA-50-D16A-ROD.89	50	L70x70x7		L70x70x7, Cut Length: 230 mm	0/298	1	1/68	
CA-50-D16A-ROD.89/SP27	CA-50-D16A-ROD.89	50	L70x70x7		L70x70x7, Cut Length: 230 mm	0/298	1	1/68	
CA-50-D16A-ROD.89/SP27	CA-50-D16A-ROD.89	40	U BOLT		Lisega Size 400518 Metric U-Bolt		1	0/16	
CA-50-D16A-ROD.89/SP3	CA-50-D16A-ROD.89	50	L70x70x7		L70x70x7, Cut Length: 250 mm	0/298	1	1/83	
CA-50-D16A-ROD.89/SP3	CA-50-D16A-ROD.89	50	U BOLT		Lisega Size 400618 Metric U-Bolt		1	0/18	
CA-50-D16A-ROD.89/SP4	CA-50-D16A-ROD.89	50	L70x70x7		L70x70x7, Cut Length: 250 mm	0/298	1	1/83	
CA-50-D16A-ROD.89/SP4	CA-50-D16A-ROD.89	50	U BOLT		Lisega Size 400618 Metric U-Bolt		1	0/18	
CA-50-D16A-ROD.89/SP5	CA-50-D16A-ROD.89	50	U BOLT		Lisega Size 400618 Metric U-Bolt		1	0/18	
CA-50-D16A-ROD.89/SP6	CA-50-D16A-ROD.89	50	L70x70x7		L70x70x7, Cut Length: 230 mm	0/298	1	1/68	

SUPPORT TAG	PIPE TAG	DN	TYPE OF ELEMENT	STD (Acc: Doc. 85 09 06 U 8100 0 10 000 03)	DESCRIPTION	LENGTH (M)	QUANT.	WEIGHT	PRICE
CA-50-D16A-ROD.89/SP6	CA-50-D16A-ROD.89	40	U BOLT		Lisega Size 400518 Metric U-Bolt		1	0/16	
CA-50-D16A-ROD.89/SP7	CA-50-D16A-ROD.89	50	L70x70x7		L70x70x7, Cut Length: 230 mm	0/298	1	1/68	
CA-50-D16A-ROD.89/SP7	CA-50-D16A-ROD.89	40	U BOLT		Lisega Size 400518 Metric U-Bolt		1	0/16	
CA-50-D16A-ROD.89/SP8	CA-50-D16A-ROD.89	50	L70x70x7		L70x70x7, Cut Length: 145 mm	0/213	1	1/06	
CA-50-D16A-ROD.89/SP8	CA-50-D16A-ROD.89	40	U BOLT		Lisega Size 400518 Metric U-Bolt		1	0/16	
CA-50-D16A-ROD.89/SP9	CA-50-D16A-ROD.89	50	L70x70x7		L70x70x7, Cut Length: 145 mm	0/213	1	1/06	
CA-65-D16A-ROD.98/SP1	CA-65-D16A-ROD.98	65	L70x70x7		L70x70x7, Cut Length: 250 mm	0/312	1	1/83	
CA-65-D16A-ROD.98/SP1	CA-65-D16A-ROD.98	65	U BOLT		Lisega Size 400718 Metric U-Bolt		1	0/30	
CA-65-D16A-ROD.98/SP10	CA-65-D16A-ROD.98	65	U BOLT		Lisega Size 400718 Metric U-Bolt		1	0/30	
CA-65-D16A-ROD.98/SP11	CA-65-D16A-ROD.98	65	U BOLT		Lisega Size 400718 Metric U-Bolt		1	0/30	
CA-65-D16A-ROD.98/SP12	CA-65-D16A-ROD.98	65	U BOLT		Lisega Size 400718 Metric U-Bolt		1	0/30	
CA-65-D16A-ROD.98/SP13	CA-65-D16A-ROD.98	65	U BOLT		Lisega Size 400718 Metric U-Bolt		1	0/30	
CA-65-D16A-ROD.98/SP14	CA-65-D16A-ROD.98	65	U BOLT		Lisega Size 400718 Metric U-Bolt		1	0/30	
CA-65-D16A-ROD.98/SP15	CA-65-D16A-ROD.98	65	U BOLT		Lisega Size 400718 Metric U-Bolt		1	0/30	
CA-65-D16A-ROD.98/SP16	CA-65-D16A-ROD.98	65	U BOLT		Lisega Size 400718 Metric U-Bolt		1	0/30	
CA-65-D16A-ROD.98/SP17	CA-65-D16A-ROD.98	65	U BOLT		Lisega Size 400718 Metric U-Bolt		1	0/30	
CA-65-D16A-ROD.98/SP18	CA-65-D16A-ROD.98	65	U BOLT		Lisega Size 400718 Metric U-Bolt		1	0/30	
CA-65-D16A-ROD.98/SP19	CA-65-D16A-ROD.98	65	U BOLT		Lisega Size 400718 Metric U-Bolt		1	0/30	
CA-65-D16A-ROD.98/SP2	CA-65-D16A-ROD.98	65	L70x70x7		L70x70x7, Cut Length: 250 mm	0/312	1	1/83	
CA-65-D16A-ROD.98/SP2	CA-65-D16A-ROD.98	65	U BOLT		Lisega Size 400718 Metric U-Bolt		1	0/30	
CA-65-D16A-ROD.98/SP20	CA-65-D16A-ROD.98	65	U BOLT		Lisega Size 400718 Metric U-Bolt		1	0/30	
CA-65-D16A-ROD.98/SP21	CA-65-D16A-ROD.98	65	U BOLT		Lisega Size 400718 Metric U-Bolt		1	0/30	
CA-65-D16A-ROD.98/SP22	CA-65-D16A-ROD.98	65	U BOLT		Lisega Size 400718 Metric U-Bolt		1	0/30	
CA-65-D16A-ROD.98/SP23	CA-65-D16A-ROD.98	65	U BOLT		Lisega Size 400718 Metric U-Bolt		1	0/30	
CA-65-D16A-ROD.98/SP24	CA-65-D16A-ROD.98	20	U BOLT		Lisega Size 400218 Metric U-Bolt		1	0/05	
CA-65-D16A-ROD.98/SP25	CA-65-D16A-ROD.98	65	L40x40x4		L40x40x4, Cut Length: 130 mm	0/130	1	0/31	
CA-65-D16A-ROD.98/SP25	CA-65-D16A-ROD.98	20	U BOLT		Lisega Size 400218 Metric U-Bolt		1	0/05	
CA-65-D16A-ROD.98/SP26	CA-65-D16A-ROD.98	20	U BOLT		Lisega Size 400218 Metric U-Bolt		1	0/05	
CA-65-D16A-ROD.98/SP27	CA-65-D16A-ROD.98	65	L40x40x4		L40x40x4, Cut Length: 130 mm	0/130	1	0/31	
CA-65-D16A-ROD.98/SP27	CA-65-D16A-ROD.98	20	U BOLT		Lisega Size 400218 Metric U-Bolt		1	0/05	
CA-65-D16A-ROD.98/SP28	CA-65-D16A-ROD.98	20	U BOLT		Lisega Size 400218 Metric U-Bolt		1	0/05	
CA-65-D16A-ROD.98/SP29	CA-65-D16A-ROD.98	65	L40x40x4		L40x40x4, Cut Length: 130 mm	0/130	1	0/31	
CA-65-D16A-ROD.98/SP29	CA-65-D16A-ROD.98	20	U BOLT		Lisega Size 400218 Metric U-Bolt		1	0/05	
CA-65-D16A-ROD.98/SP3	CA-65-D16A-ROD.98	65	L70x70x7		L70x70x7, Cut Length: 250 mm	0/312	1	1/83	
CA-65-D16A-ROD.98/SP3	CA-65-D16A-ROD.98	65	U BOLT		Lisega Size 400718 Metric U-Bolt		1	0/30	
CA-65-D16A-ROD.98/SP30	CA-65-D16A-ROD.98	20	U BOLT		Lisega Size 400218 Metric U-Bolt		1	0/05	
CA-65-D16A-ROD.98/SP31	CA-65-D16A-ROD.98	20	U BOLT		Lisega Size 400218 Metric U-Bolt		1	0/05	
CA-65-D16A-ROD.98/SP32	CA-65-D16A-ROD.98	65	L40x40x4		L40x40x4, Cut Length: 130 mm	0/130	1	0/31	
CA-65-D16A-ROD.98/SP32	CA-65-D16A-ROD.98	20	U BOLT		Lisega Size 400218 Metric U-Bolt		1	0/05	
CA-65-D16A-ROD.98/SP35	CA-65-D16A-ROD.98	65	L40x40x4		L40x40x4, Cut Length: 130 mm	0/130	1	0/31	
CA-65-D16A-ROD.98/SP35	CA-65-D16A-ROD.98	20	U BOLT		Lisega Size 400218 Metric U-Bolt		1	0/05	
CA-65-D16A-ROD.98/SP36	CA-65-D16A-ROD.98	65	L40x40x4		L40x40x4, Cut Length: 130 mm	0/130	1	0/31	
CA-65-D16A-ROD.98/SP36	CA-65-D16A-ROD.98	20	U BOLT		Lisega Size 400218 Metric U-Bolt		1	0/05	
CA-65-D16A-ROD.98/SP4	CA-65-D16A-ROD.98	65	U BOLT		Lisega Size 400718 Metric U-Bolt		1	0/30	
CA-65-D16A-ROD.98/SP5	CA-65-D16A-ROD.98	65	U BOLT		Lisega Size 400718 Metric U-Bolt		1	0/30	
CA-65-D16A-ROD.98/SP6	CA-65-D16A-ROD.98	65	U BOLT		Lisega Size 400718 Metric U-Bolt		1	0/30	
CA-65-D16A-ROD.98/SP7	CA-65-D16A-ROD.98	65	U BOLT		Lisega Size 400718 Metric U-Bolt		1	0/30	
CA-65-D16A-ROD.98/SP8	CA-65-D16A-ROD.98	65	U BOLT		Lisega Size 400718 Metric U-Bolt		1	0/30	
CA-65-D16A-ROD.98/SP9	CA-65-D16A-ROD.98	65	U BOLT		Lisega Size 400718 Metric U-Bolt		1	0/30	

AUTOMATIC VALVE WATER

VALVE NAME	VALVE PROCESS DATA																		Type	VALVE						
	DESIGN							LINE 1 (INLET)						LINE 2 (OUTLET)						CHARACTERISTICS						
	PRESS. (barg)	TEMP (°C)	INLET PRESSURE (bara)	DP (bar)	TEMP (°C)	SPECIFIC VOLUME (m3/kg)	VISCOSITY (kg/m.s)	ITEM TAG	SIZE (DN)	THICKNESS (mm)	ISOLA. (mm)	MATERIAL	CONNECTION TYPE	SIZE (DN)	THICKNESS (mm)	ISOLA. (mm)	MATERIAL	CONNECTION TYPE		USE (Regulation / ON-OFF / Selfregulating)	FLUID	NOISE ALLOWED (dB a 1m)	OPEN TIME (s)	CLOSED TIME (s)	FAIL POSITION (FO/FC/FA)	PRICE
CWS-AOV-105	16	80	2/5		30	0/001	0/000798	CWS-80-D16A-ROD.105	80	3/2		D16A	FL	80	3/2		D16A	FL	Butterfly	On-off	Water	85	<7	<10	FO	

برنامه زمان بندی

مشخصات فنی عمومی

کلیه آیین نامه‌های مربوطه مخصوصاً فهرست ذیل میبایست توسط پیمانکار رعایت گردد :

- نشریه 128
- استاندارد ASTM
- استاندارد DIN
- استاندارد ASME
- استاندارد API
- استاندارد AISI
- استاندارد BS
- استاندارد AWWA

- شایان ذکراست پس از انعقاد قرارداد و درمدت زمان اجرای آن ، ملاک عملکرد دستگاه مشاور، مشخصات فنی و مقادیر مندرج در اسناد قرارداد خواهد بود و درصورت درخواست هرگونه تغییرات در مشخصات فنی از جانب پیمانکار، اعمال تغییرات درخواستی منوط به بررسی مشاورو تأیید کارفرما می‌باشد.

(لیست سازندگان)

PIPING		
ITEM	NAME OF SUPPLIER	Country
SEAMLESS PIPE	NATIONAL IRANIAN STEEL INDUSTRIAL GROUP (FROM 2 TO 4 INCH)	Iran
	TIANJIN PIPE CORPORATION (FROM 4 TO 10 INCH)	China
	PANGANG GROUP CHENGDU STEEL & VANADIUM CO (FROM 1 TO 20 INCH)	China
	MANNESMANN LINE PIPE GMBH (FROM 1 TO 16 INCH)	Germany
	V & M DEUTSCHLAND GMBH (FROM 1 TO 28 INCH)	Germany & France
	JFE (FROM 1 TO 16 INCH)	Japan
	SUMITOMO HEAVY INDUSTRY LTD.(FROM 1 TO 20 INCH)	Japan
	NIPPON STEEL (FROM 1 TO 16 INCH)	Japan
	SIDE CO (FROM 1 TO 16 INCH)	Spain
	TUBOS REUNIDOS SA (FROM 3/4 TO 6 INCH)	Spain
	SHANDONG LUXING STEEL PIPE CO (UP TO INCH)	China
	HEBEI LITONGLIAN SEAMLESS PIPE CO (UP TO 10 INCH)	China
	HENGYANG VALIN STEEL TUBE CO (UP TO 24 INCH)	China
	WUXI SEAMLESS OIL PIPE CO LTD (UP TO 12 INCH)	China
	Luleh Gostar of Esfarayen (FROM 7 TO 16 INCH)	Iran
	PISHRO KALA ENERGY SEPEHR CO.	Iran
	PART NIROO	Iran
	AHAN FAJR	Iran
SAW PIPE	AHWAZ PIPE MILL (FROM 24 TO 56 INCH)	Iran
	SAFA ROLLING & PIPE MILL CO (FROM 20 TO 64 INCH)	Iran
	SADID PIPE & PROFILE COM (FROM 24 TO 120 INCH)	Iran
	IRAN SPIRAL CO (FROM 20 TO 100 INCH)	Iran
	MAHSHAHR PIPE MILL CO (FROM 24 TO 56 INCH)	Iran
	ILVSA SPA (FROM 18 TO 56 INCH)	Italy
	JFE (FROM 16 TO 56 INCH)	Japan
	NIPPON STEEL (FROM 16 TO 56 INCH)	Japan
	PANYU CHU KONG (FROM 18 TO 72 INCH)	China
	LIAOYANG STEEL TUBE CO (FROM 16 TO 64 INCH)	China
ERW PIPE	AHWAZ PIPE MILL (FROM 6 TO 24 INCH)	Iran
	SAFA ROLLING & PIPE MILL CO (FROM 8 TO 24 INCH)	Iran
	SAVEH ROLLING & PROFILE MILL CO (FROM 20 TO 64 INCH)	Iran
	CONFAB INDUSTRIAL SA (FROM 4 TO 20 INCH)	Iran
	SHANGHAI ALISON STEEL PIPE CO (FROM 4 TO 12 INCH)	Iran
	MANNESMANN LINE PIPE GMBH (FROM 1 TO 24 INCH)	Germany
	CORINTH PIPE WORKS (FROM 6 TO 24 INCH)	Greece
	ILVSA SPA (FROM 6 TO 20 INCH)	Italy
	JFE (FROM 1 TO 24 INCH)	Japan
	NIPPON STEEL (FROM 1 TO 24 INCH)	Japan
	HYUNDAI (FROM 1/2 TO 24 INCH)	Korea
	PANYU CHU KONG (FROM 4 TO 20 INCH)	China
	SEAH (FROM 1/2 TO 24 INCH)	Korea
	PISHRO KALA ENERGY SEPEHR CO.	Iran
	PART NIROO	Iran
	AHAN FAJR	Iran
FITTING	ARVIN TABRIZ	Iran
	STEEL ASA	Iran
	IRAN FORGE	Iran
	BEHSAZAN JONOOB	Iran
	PARS REGULATOR	Iran
	TOOS PAYVAND	Iran
	SHID ARIAN TEHRAN	Iran
	SANAT ETESAL AZAR	Iran
	FOOLAD ASA	Iran
	MAHAD SANAT ARAK	Iran
	TECNOFORGE	Italy
	HEBEI HAITIAN PIPE FITTINGS CO	China
	BASSI	Italy
	DONG JIN FITTING	Korea
	PANYU CHU KONG STEEL PIPE CO.LTD	China

VALVE	PETRO TAJHIZ SEPAHAN (GLOBE,CHECK,BALL,GATE,NEEDLE)	Iran
	DEJ FOROUZ ARAK	Iran
	GODAKHTAR	Iran
	PARS PANGAN	Iran
	MARO SANAT	Iran
	FAJRE MARKAZI INDUSTRIAL GROUP	Iran
	GOSTARESH SHIRSAZI	Iran
	TEHRAN SUFA	Iran
	OMB (NEEDLE,CHECK,BALL,GATE)	Italy
	BREDA (PLUG,CHECK,BALL,GATE)	Italy
	LVF (GLOBE,CHECK,BALL,GATE)	Italy
	VITAS (GLOBE,CHECK,BALL,GATE)	Italy
	FZV (PLUG,GLOBE,CHECK,BALL,GATE,BUTTERFLY)	China
	HUAGUANG (PLUG,GLOBE,CHECK,BALL,GATE,BUTTERFLY)	China
	CMK (GLOBE,CHECK,BALL,GATE,BUTTERFLY)	China
	WUZHOU CHINA (PLUG,GLOBE,CHECK,BALL,GATE,BUTTERFLY)	China
	TIANSHENG (GLOBE,CHECK,BALL,GATE,BUTTERFLY)	China
	DKM (DONG KANG METAL) (NEEDLE,GLOBE,CHECK,BALL,GATE)	South Korea
	SAMWOO KJS TEC (GLOBE,CHECK,BALL,GATE)	Korea
	S&S VALVE CO (PLUG,GLOBE,CHECK,BALL,GATE)	South Korea
	S & W Ind CO Ltd (GLOBE,CHECK,GATE,BUTTERFLY)	South Korea
	BABCOCK POWER ESPANA (GLOBE,CHECK,BALL,GATE)	Spain
CAST IRON VALVE	Esfahan Malleable Company (EMC)	Iran
	MIRAB CO	Iran
	MECHANIC AB	Iran
	Nima Group	Iran
	NAHRAB	Iran
	Emerson	UK/GE
	GOLD	GE
AUTOMATIC VALVES (BUTTERFLY)	SAMSON	GE
	METSO	FIN
	DRESSER	UK
EXPANSION JOINT	ENETAF SANE (rubber & metal)	Iran
	ERTEASH GOSTAR PEYMAN	Iran
	IRAN INDUSTRIAL VIBRATIONS	Iran
	KARON SAR	Iran
	TASMEH NAGHALEH IRAN	Iran
FLANGE	FELIX TECHNOLOGY CO.,LTD	Korea
	FORGEROSSI S.P.A (# 600 up to 900)	Italy
	GALPERTI	Italy
	MACHINE SAZI ARAK	Iran
	MAHAN DOR AHWAZ	Iran
	PARSIAN SAZEH IRANIAN (SEPAHAN)	Iran
	PETRO SANAT ADEL	Iran
	TOOS PAYVAND	Iran
	ARVIN TABRIZ	Iran
	IRAN FORGE	Iran
	PARS REGULATOR	Iran
	NIROTEC GMBH & CO.KG	Iran
	OFFICINE SANTAFEDE SRL	Italy
	HEBEI DINGXIANG HAOKUN FORGED FLANGE	China

GASKET	ATBIN ISTA TECHNICAL (spiral wound)	Iran
	BEHTA INDUSTRIAL GASKET (spiral wound)	Iran
	KIAN WASHER SHARGH (spiral wound)	Iran
	KLINGERAN (spiral wound)	Iran
	PETRO IDEH KOOSHESH (spiral wound)	Iran
	KIMIA FARAVAR SANAT	Iran
	FLEXITALLIC	Iran
	IMEN BEHINE SAZ-E- FOROUGH	Iran
	MASHHAD WASHER	Iran
	PIDEMCO	Iran
O-RING	FARARUB SHIRAZ	Iran
	JAVIDAN (up to 20",up to #300)	Iran
	PARS FIRE PROOF	Iran
BOLT AND NUT	BASTAARVAN STEEL IND	Iran
	INDUSTRIAL NUTS & BOLTS ENGINEERING	Iran
	KIAN PICH (bolt & nut (stud & hex) (up to m30))	Iran
	SAHAND POULAD P.J.S	Iran
	POOLAD PEECH KAR	Iran
	PICH VA PARCH PARS	Iran
	PICH ETESAL PARS	Iran
	PETRONUT	Iran
	PART SAZI MASHHAD	Iran
	MADSA	Iran
PAINT	ALVAN RANG	Iran
	BAJAK PAINT	Iran
	NEGIN ZEREH CHEMICAL & INDUSTRIAL	Iran
	PARS ALBORZ POOSHESH	Iran
	PARS SHAMIN	Iran
	PEDRAM RANG	Iran
	RANA KIMIA FAM	Iran
	RONASS	Iran
	TEIPH SAIPA	Iran
	ARANG	Iran

TECHNICAL SPECIFICATION

DENOMINATION		**INSTRUMENTATION AND CONTROL REQUIREMENTS FOR PIPE/ MECHANICAL EQUIPMENT**			
DOCUMENT		**00001ESP70004-R00**			
CLIENT		**ARVAND KAVEH STEEL COMPLEX**			
EDITED	**DATE**	**VERIFIED**	**DATE**	**APROVED**	**DATE**
E.D.C	**12/03/2015**	**I.G.**	**14/04/2015**	**J.G.**	**14/04/2015**

REVISION INDEX.

REV.	DATE	EDITED	VERIFIED	APROB.	CHAP.	MODIFICATION
00	14/04/2015	E.D.C.	I.G.	J.G.		First issue

INDEX.

Content **Page**

1. PURPOSE ____ *6*

2. APPLICABLE CODES AND STANDARDS ____ *7*

2.1. GENERAL ____ **7**

2.2. AMERICAN SOCIETY FOR TESTING AND MATERIALS (ASTM) ____ **7**

2.3. AMERICAN SOCIETY OF MECHANICAL ENGINEERS (ASME) ____ **7**

2.4. INSTRUMENT SOCIETY OF AMERICA (ISA) ____ **8**

2.5. INTERNATIONAL STANDARDS ORGANIZATION (ISO) ____ **8**

2.6. AMERICAN NATIONAL STANDARDS INSTITUTE (ANSI) ____ **8**

2.7. ELECTRONIC INDUSTRIES ASSOCIATION (EIA) ____ **9**

2.8. INSTITUTE OF ELECTRICAL AND ELECTRONIC ENGINEERS (IEEE) ____ **9**

2.9. NATIONAL FIRE PROTECTION ASSOCIATION (NFPA) ____ **9**

2.10. NATIONAL ELECTRICAL MANUFACTURERS ASSOCIATION (NEMA) **9**

2.11. INTERNATIONAL ELECTROTECHNICAL COMMISSION (IEC) ____ **9**

2.12. EUROPEAN DIRECTIVES ____ **10**

2.13. EUROPEAN STANDARDS ____ **10**

3. FIELD INSTRUMENTATION ____ *13*

3.1. GENERAL CRITERIA ____ **13**

3.1.1. Electrical Signals ____ 14

3.1.2. Construction requirements ____ 15

3.2. PROCESS CONNECTION ____ **15**

3.2.1. Root Valve ____ 16

3.3. FLOWMETERS ____ **16**

3.3.1. Primary Flow Instruments 16
3.3.2. Differential Pressure Transmitters 17

3.4. PRESSURE INSTRUMENTS 17
3.4.1. General 17
3.4.2. Transmitters 18
3.4.3. Pressure Switches 18
3.4.4. Manometers 18

3.5. TEMPERATURE INSTRUMENTS 19
3.5.1. General 19
3.5.2. Thermocouples 19
3.5.3. Thermowells 20
3.5.4. Thermostats 23
3.5.5. Thermometers 23

3.6. LEVEL INSTRUMENTS 24
3.6.1. Transmitters 24
3.6.2. Transmitters-Displacers 24
3.6.3. Level Switches 24
3.6.4. Glass Level Gauges 24

3.7. VIBRATION MEASUREMENTS 25
3.7.1. Two-wire Transmitters 25

3.8. INSTALLATION OF INSTRUMENTS 26
3.8.1. General 26
3.8.2. Instrument Installation Requirements 28
3.8.3. Detail Arrangement of Instrument Assembly 31
3.8.3.1. Differential Pressure Instruments (Flow/⊗P) — Liquid Services 31
3.8.3.2. Differential Pressure Instruments (Flow/⊗P) — Air or Gas Supply Services 31
3.8.3.3. Differential Pressure Instruments for Measuring Tank Levels 31
3.8.3.4. Pressure Instruments —Liquid Services 31
3.8.3.5. Pressure Instruments — Gas or Vacuum Services 32
3.8.3.6. Local Pressure and Differential Pressure Indicators 32
3.8.3.7. Mounting Structure for Instruments not Inserted in the Process Fluid 32
3.8.4. Location of Instruments 32
3.8.5. Instrument Support 33

3.9. MEASUREMENT UNITS FOR INSTRUMENT SCALES 34

4. CONTROL VALVES 35

5. MISCELLANEOUS EQUIPMENT ____ *37*

5.1. JUNCTION BOXES ____ **37**

5.2. TERMINAL POINTS ____ **38**

6. DOCUMENTATION ____ *38*

7. INSTRUMENTATION TEST AND INSPECTION ____ *41*

7.1. TEST ____ **41**

7.2. INSPECTIONS ____ **41**

1. PURPOSE

The purpose of this document is to establish the I&C requirements for the equipment and piping that will be used in the Rolling Mill ARVAND KAVEH STEEL COMPLEX.

Compliance with the I&C requirements set out in this document shall be mandatory for all aspects of the supply of equipment and components in order to achieve a homogenous I&C design for all installations concerned.

2. APPLICABLE CODES AND STANDARDS

2.1. GENERAL

All the codes, standards and regulations listed below are to be used in their latest issue together with applicable addenda and cases. All the equipment supplied its manufacture and design, associated documentation and tests, etc must comply with the following publications.

2.2. AMERICAN SOCIETY FOR TESTING AND MATERIALS (ASTM)

- ASTM Vol 01, Iron and Steel Product
- E230 – Standard Specification and Temperature – Electromotive Force (EMF) Tables for Standardized Thermocouples

2.3. AMERICAN SOCIETY OF MECHANICAL ENGINEERS (ASME)

- ASME Section II, Material Specifications
- ASME Section V, Non-Destructive Examination
- ASME Section VIII, Pressure Vessels
- ASME Section IX, Welding Qualifications
- ASME Fluid Meters 6th Edition
- ASME B1.1, Unified Inch Screw Threads (UN and UNR Thread Form)
- ASME B1.20.1, Pipe Threads, General Purpose (Inch)
- ASME B16.5, Steel Pipe Flanges and Flange Fittings
- ASME B16.34, Valves - Flanged, Threaded, and Welding End
- ASME B16.36, Orifice flanges
- ASME MFC-3M Measurement of fluid flow in pipes using orifice, nozzle and venturi

- PTC 19-2, Pressure Measurement. Instruments and Apparatus (Performance Test Codes)
- PTC 19-3, Temperature Measurement Instruments and Apparatus

  (Performance Test Codes)
- PTC 19-5, Application Part II of Fluid Meters (Performance Test Codes)

2.4. INSTRUMENT SOCIETY OF AMERICA (ISA)

- ISA – MC96.1 - Temperature Measurement Thermocouples
- ANSI/ISA - 5.1 - Instrumentation Symbols and Identification
- ANSI/ISA - 5.2 - Binary Logic Diagrams for Process Operations
- ANSI/ISA - 5.4 - Instrument Loop Diagrams
- ISA - 5.5 - Graphic Symbols for Process Displays
- ANSI/ISA - 50.1 - Compatibility of Analog Signals for Electronic Industrial Process Instruments
- ANSI/ISA - 51.1 - Process Instrumentation Terminology
- ANSI/ISA - 75.01 - Flow Equations for Sizing Control Valves
- ANSI/ISA - 75.02 - Control Valve Capacity Test Procedures
- ANSI/ISA - 7.0.01 - Quality Standard for Instrument Air

2.5. INTERNATIONAL STANDARDS ORGANIZATION (ISO)

ISO 5167-1, 1991 and ISO 5167-1, 1991/Amd 1,1998, Measurement of Fluid flow by means of pressure differential devices Part 1: Orifice Plates, nozzles and venturi tubes inserted in circular cross - section conduits running full.

2.6. AMERICAN NATIONAL STANDARDS INSTITUTE (ANSI)

- ANSI/ASME B31.3, Process Piping
- ANSI/FCI 70-2, Control Valve Seat Leakage

2.7. ELECTRONIC INDUSTRIES ASSOCIATION (EIA)

- RS-232C, Interface between Data Terminal Equipment and Data Communications Equipment Employing Serial Binary Data Interchange

2.8. INSTITUTE OF ELECTRICAL AND ELECTRONIC ENGINEERS (IEEE)

- IEEE 142, Recommended Practice for Grounding of Industrial and Commercial Power Systems
- IEEE 472, Surge Withstand Capability
- IEEE 518, Guide for the Installation of Electrical Equipment to Minimize Electrical Noise Inputs to Controllers from External Sources
- IEEE 802.4, Ethernet. (Information Processing Systems-Local Area Networks - Part-4: Toke - Passing Bus Access Method and Physical Layer Specifications

2.9. NATIONAL FIRE PROTECTION ASSOCIATION (NFPA)

- NFPA 70, National Electric Code

2.10. NATIONAL ELECTRICAL MANUFACTURERS ASSOCIATION (NEMA)

- ICS 1, General Standard for Industrial Controls and Systems
- ICS 2, Industrial Control and Systems: Controllers, Contactors, and Overload Relays, Rated not more than 2000 Volts AC or 750 Volts DC
- NEMA 250, Enclosures for Electrical Equipment (1000 Volts Maximum)

2.11. INTERNATIONAL ELECTROTECHNICAL COMMISSION (IEC)

- IEC-60079-1, Electrical Apparatus for Explosive Gas Atmospheres, Part I: Construction and Test of Flameproof Enclosures of Electrical Apparatus.

- IEC-60079-10, Electrical apparatus for explosive gas atmospheres - Part 10: Classification of hazardous areas.
- IEC-60079-14, Electrical apparatus for explosive gas atmospheres - Part 14: Electrical installations in hazardous areas (other than mines).
- IEC-60529, Degrees of Protection Provided by Enclosures (IP Code)
- IEC-60584, Thermocouple Extension and Compensated Cables Tolerances and Identification System
- IEC-60770, Transmitters for use in industrial-process control systems
- IEC-61506, Industrial Process Measurement and Control Documentation of application software.
- IEC-61537, Cable Tray Systems and Cable Ladder Systems
- IEC-60245, Rubber insulated cables - Rated voltages up to and including 450/750 V

2.12. EUROPEAN DIRECTIVES

- 73/23/EEC Low Voltage
- 89/336/EEC Electromagnetic compatibility
- 94/9/EC Equipment and protective systems intented to use in potentially explosive atmospheres (ATEX)
- 97/23/EC Pressure equipment
- 98/37/EC Machinery

2.13. EUROPEAN STANDARDS

- EN 1127 Explosive atmospheres – Explosion prevention and protection
- EN 50014 Electrical apparatus for potentially explosive atmospheres – General requirements
- EN 50015 Electrical apparatus for potentially explosive atmospheres – Oil immersion “o”

- EN 50017 Electrical apparatus for potentially explosive atmospheres – Powder filling “q”
- EN 50018 Electrical apparatus for potentially explosive atmospheres – Flameproof enclosure
- EN 50019 Electrical apparatus for potentially explosive atmospheres – Increased safety “e”
- EN 50020 Electrical apparatus for potentially explosive atmospheres – Intrinsic safety “i”
- EN 60204 Safety of Machinery – Electrical equipment of machines
- EN 60255 Electrical relays
- EN 60529 Degrees of protection provided by enclosures (IP Code)
- EN 60534 Industrial-process control valves
- EN 60546 Controllers with analogue signals for use in industrial-process control systems
- EN 60584 Thermocouples
- EN 60617-12 .Graphical symbols for diagrams, Part 12-Binary logic elements
- EN 60654 Industrial-process measurement and control equipment
- EN 60751 Industrial platinum resistance thermometer sensors
- EN 61000-6-2 Electromagnetic Compatibility (EMC) - Part 6-2:Generic standards - Immunity for industrial environments
- EN 61000-6-4 Electromagnetic Compatibility-Part 6: Generic standards - Section 4: Emission standard for industrial environments
- EN 61003 Industrial-process control systems-Instruments with analogue imputs and two or multi-state outputs
- EN 61010 Safety requirements for electrical equipment for measurement, control, and laboratory use
- EN 61020 Electromechanical switches for use in electronic equipment

- EN 61069 Industrial-process measurement and control
- EN 61131Programmable controllers
- EN 61140 Protection against electrical shock
- EN 61207 Expression of performance of gas analysers
- EN 61298 Process measurement and control devices
- EN 61310 Safety of machinery -Indication, marking and actuation
- EN 61326 Electrical equipment for measurement, control and laboratory use-EMC requirements
- EN 61440 Secondary cells and batteries containing alkaline or other non- acid electrolytes

3. FIELD INSTRUMENTATION

3.1. GENERAL CRITERIA

Sensors, transmitters and actuators shall be designed to withstand the following environmental temperatures present in the location:

Ambient Temperature:

- Absolute maximum..... 53ºC
- Mean 25.3ºC
- Absolute minimum 17.7ºC

Relative Humidity:

- Absolute maximum..... 68%

The enclosures of electrical and electronic components of instruments located in local areas or outdoors shall be designed to a grade of environmental protection of at least IP65 (against dust and water), in accordance with IEC 60529.

Instruments located in atmospheres which are hazardous because of the content of gas mixtures or combustible vapours shall be designed to a grade of protection commensurate with their classification, division and group for the area in which they are to be installed. Instruments design shall conform to the Equipment and protective systems intented to use in potentially explosive atmospheres Directive 94/9/EC (ATEX).

All electric and electronic instruments installed in classified areas shall have CE certification or equivalent. For this purpose, explosion-proof enclosures, barrier or galvanic isolators shall be used.

In the design and construction of I&C electrical and electronic equipment, consideration must be given to electromagnetic compatibility (EMC) and electromagnetic interference must be kept within the permissible limits, in accordance with EEC directive 89/336/EEC and will be CE marked.

In general, electrical and electronic instruments shall be designed and constructed so that they produce limited interference and exhibit adequate resistance to interference produced by electrostatic charges, radio frequencies, fast electric transistors and low frequency magnetic fields generated by transformers, electric sleevings, etc, as established by the requirements of IEC 61000.

Instruments will be supplied calibrated and with the appropriate certificate.

All instrument scales shall be in metric units using the International System of Units (SI). The demand and position indication of final control devices shall be calibrated in percentages.

3.1.1. ELECTRICAL SIGNALS

In accordance with ICS 2 (NEMA Standard), the arrangement for instrument contacts (process switches, etc) used in control or alarm circuits and their basic characteristics shall be as follows, unless otherwise indicated in the specifications:

- Switches shall be of snap action type
- Arrangement: single pole double throw or double pole double throw microswitches (SPDT Form C or DPDT Form C). The use of mercury microswitches is not permitted
- Basic characteristics shall be in accordance with tables 2-125.1 and 2-125.2 of the above-mentioned standard:

Rated voltage	Rated continuous current	Maximum cut-off current	Maximum cut-off power
230 V AC	2,5 A	0.75 A	180 VA
125 V DC	1 A	0.22 A	28 W

In all contacts (process switches, etc) the normally close contact (NC) will be the preferred option to be hardwired into the DCS, when required. The process switch alarm will be produced by the contact opening. This standard will be always applied unless otherwise indicated.

SARTECH will send to each Mechanical Equipment bidder a table as the one shown in Appendix A. Bidder will complete the table with all the information related to the interchanged signals between distributed control system (DCS) and mechanical equipment (ME).

Standardized analogue signals shall be 4-20 mA, from two wire transmitters powered at 24 V DC from DCS cards. Transmitters shall admit an external load impedance of at least 500 ohms at 24 Vdc.

The power supplies normally used for Mechanical Equipment shall be 400 Vac (3 phases), 50 Hz. Power supply voltage for solenoid valves shall be 48 Vdc, 50 Hz, powered from DCS.

The I&C cables used shall comply with the "Electrical Requirement for Mechanical Equipments and Package Plant" document.

Cables shall be protected by means of flexible conduit from the trays to the instruments.

3.1.2. CONSTRUCTION REQUIREMENTS

Unless otherwise indicated in the data sheets, stainless steel (300 series) shall be used for the internal parts of the instrument which are in contact with the process fluid. The use of alternative low-corrosion materials may be admitted with the prior approval of the engineer responsible.

The materials used for the body of the instrument (casing) shall be compatible with the pipe material and the characteristics of the process fluid.

A nameplate, made of stainless steel (series 300), shall be fixed in the factory to all instruments, and it will bear the project system code in accordance with the document No 85-11-80-E-ML-001-A "Nomenclature in electric schemes".

Instruments shall be selected so that, in general, the normal measurement of the variable is between 50% and 75% of the highest value in the measurement range.

Both the manometers and the thermometers shall be of the concentric type of 100 mm dial and the complete scale shall have an amplitude of 270 degrees.

3.2. PROCESS CONNECTION

Instrument lines shall be as short as possible.

The instruments shall be connected to the process in accordance with that established in the applicable paragraphs of ANSI/B31.3 Section 322.3. The size of the connection will depend on the design pressure and temperature of the process pipe and/or tank. In accordance with this standard, the fluid shall be treated as a high-pressure and/or high-temperature fluid and the corresponding connection details will consequently apply when it exceeds one or both of the following values:

- Pressure..... 62 bar
- Temperature..... 425ºC

The following are the process connection sizes to be used for the different types of measurement:

- Pressure, and differential pressure: ¾" at high pressure/temperature and ½" at low pressure/temperature
- Pressure gauges with seal 1" flanged
- Temperature 1½" at high pressure and vacuum and 1" at low pressure
- Level: transmitters (lateral mounting) 1½" or 2", external switches (lateral mounting) 1", internal switches (top mounting) 4", glass gauges ¾". The connections will be in general SW up to and including 2" of nominal diameter. In the case of internal level switches and magnetic level indicators, the connections will be flanged with the rating corresponding to the design pressure and temperature of the tank.
- Other instruments such as rotameters, flow switches, etc, shall be connected to pipes in accordance with the manufacturers' instructions

3.2.1. ROOT VALVE

The root valve shall be made of the same material as the pipe.

Two (2) root valves 3/4" in size shall be fitted if the process line carries high-pressure and/or high-temperature fluid (P > 62 bar or T > 425ºC). In all other cases, it shall be considered that low-pressure and low-temperature fluid is being carried and only one (1) root valve 1/2" in size will be necessary.

3.3. FLOWMETERS

3.3.1. PRIMARY FLOW INSTRUMENTS

The accuracy of the entire flow measuring shall be min. 2%. Flowmeters will preferably be installed in horizontal pipes and with the assure of being full of liquid.

They shall be selected depending on allowable pressure loss, type of fluid and required accuracy.

Nozzles, orifice plates, Vortex, Electromagnetic flowmeter, Venturi tubes or Pitot tubes will be used as the primary flow measurement elements. They shall be manufactured and installed in accordance with the instructions of ASME Power Test Code 19.5 or ISO-5167-1991.

In orifice plates the ratio of d/D diameters (d=orifice diameter, D= pipe diameter) will range between 0.35 and 0.72 and they will be sized considering that normal flow must be maintained between 70% and 80% of the measurement range. Orifice plates shall be supplied complete with flanges with in-built differential pressure taps. Nozzles shall be of the long radius, weld-in type complete

with holding rings and shall be supplied installed in a calibrated pipe section of the same characteristics as the process line pipe.

Nozzles or “Venturis” shall be used where high accuracy is required with minimum pressure drop.

Orifice plates and nozzles shall be made of stainless steel 316 or better.

3.3.2. DIFFERENTIAL PRESSURE TRANSMITTERS

The differential pressure transmitters shall have characteristics similar to those described for the pressure transmitters (Section 4.4.2), with the exception of requirements that are specific to their particular function.

The differential pressure transmitters shall be able to withstand the maximum process pressure in one branch while the other branch is vented to the atmosphere, without risk of damage and without affecting their calibration.

They shall take correct measurements over and above a flow greater than 5% of the calibration range, precision greater than ±0.1% of the full scale, without including the primary instrument error.

3.4. PRESSURE INSTRUMENTS

3.4.1. GENERAL

Pressure detecting instruments in contact with the process fluid shall generally be made of stainless steel 316, unless the type of process fluid requires the use of different material. The instruments shall be able to withstand an overpressure of at least 1.5 times the maximum process pressure.

The location of the connection will be as follow, the first pipe for liquids, the second one for gas and steam, and being P= prefer location and A= alternative ones.

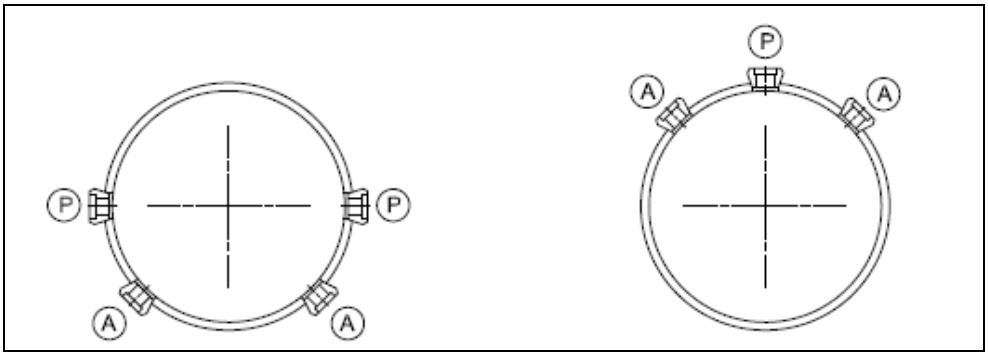

3.4.2. TRANSMITTERS

Transmitters shall be smart type solid-state electronics, with HART protocol, i.e., 4-20 mA, 2-wire, with externally adjustable span, zero and damping (continuous). The 4-20 mA DC signal will represent a calibrated span of 0-100% of the variable measurement range. They shall admit an external load impedance of at least 500 ohms for a 24 VDC power supply.

Pressure and differential pressure transmitter will be provided with a local indicator with an accuracy equal or better than ± 2% of the calibrated span.

Minimum accuracy shall be equal to or better than ±0.1 % of calibrated span (±1% for level) including combined effect of linearity, hysteresis, and repeatability. The overpressure limit shall be 150% of the maximum range, unless otherwise indicated. The rangeability will be 1:50 .

Information related to the configuration and calibration of the instrument will be stored in the transmitter memory.

With the use of portable instruments it shall be possible to read the value of the variable in electrical or engineering units, view the tag, locate faults, and recalibrate and reconfigure the transmitter.

Wet parts shall be made of stainless steel 316 and the process connections shall be

½" NPT.

3.4.3. PRESSURE SWITCHES

Process switches are to be avoided where practical and replaced by transmitters.

Switches shall not contain mercury.

3.4.4. MANOMETERS

In general, the manometers will be erected locally, close to the point where the pressure is measured. They shall be of the Bourdon type, dust and water tight. In precision or low pressure applications, other sensors may be chosen (spiral, helicoidal, bellows, etc.) the most suitable for the application. Unless otherwise indicated, the casing shall be made of 100 mm diameter stainless steel and shall be impermeable to dust and water.

Safety glass with a threaded retaining ring shall be used. The spheres shall be of white laminated plastic with lettering and function engraved in black. The connection in the lower part of the manometer shall be ½" NPT Male. Pressure gauges with seals shall be 1” flanged.

Accuracy shall be ±1% full scale.

The supply shall include pulsation dampers in pump discharge, siphons in the case of steam, and diaphragm seals in fluids like fuel-oil, etc. Glycerine fill in applications where mechanical vibrations are expected.

The instrument range shall be selected so that the normal operating point stays between 1/3 and 2/3 of the end of the scale.

The location of the manometers shall be such that they are easy to see.

3.5. TEMPERATURE INSTRUMENTS

3.5.1. GENERAL

All instruments for measuring process temperatures shall be equipped with thermowells to protect the sensing element and to enable it to be replaced without interrupting the process.

In areas that require, individual thermowells made of material compatible with the pipe will be installed for tests (thermowells for tests).

The location of the connection will be as follow, the first pipe for liquids, the second one for gas and steam, and being P= prefer location and A= alternative ones.

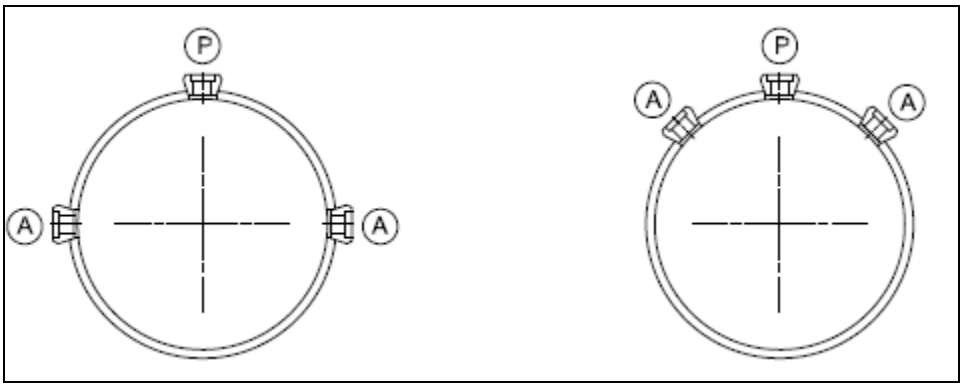

3.5.2. THERMOCOUPLES

Thermocouples shall be the typical element used for remote temperature measurement. They shall be type K with ungrounded hot junction (electrically isolated from the sheat and thermowell), unless otherwise specified.

Thermocouples shall be spring-loaded and dual element type. Thermocouples wiring shall be shielded.

Temperature transmitters will be supplied for each thermocouple.

3.5.3. THERMOWELLS

These shall be manufactured as one piece and holes subsequently drilled into them. Material of the thermowell shall be stainless steel except those located in alloy steel piping which shall be of material equivalent to that of the piping.

The thermowell installation in equipment or pipes in utilities areas with low pressure and low temperature lines, shall be flanged, threaded or welded in accordance with piping specifications.

In high-pressure, vacuum or high-temperature pipes (pressure>62 bar, pressure<0 bar or temperature>425°C) the thermowell shall be 1½" and it will be inserted directly into the pipe across a 1 5/8" drill hole without transition accessories

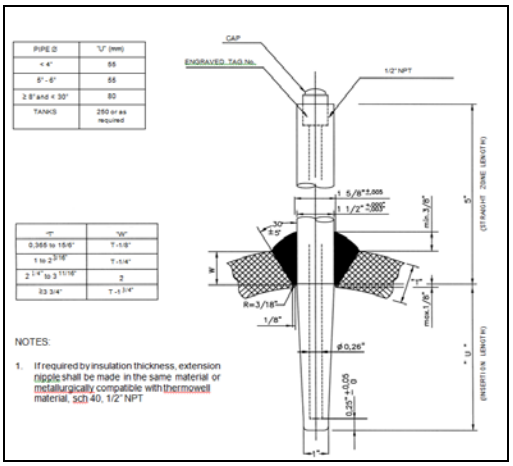

In low-pressure and low-temperature pipes (pressure <62 bar, pressure>0 bar and temperature <425ºC) the thermowell shall be 1” and it will be inserted into the pipe through a transition accessory (sockolet) with the same rating and of the same material as the pipe.

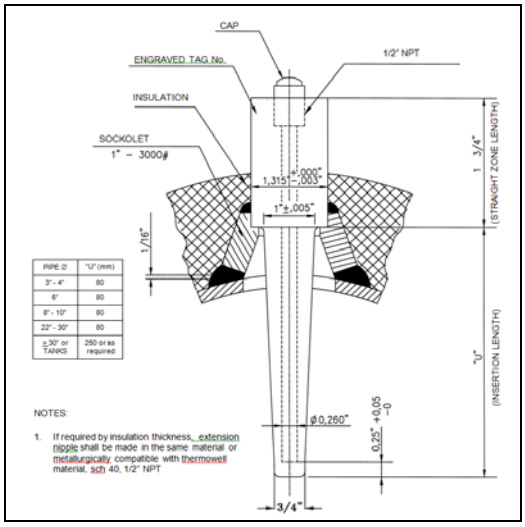

In pipes for non heavy duty the use of threaded thermowell is allowed. Connection of the thermowell to the pipe shall be by means of a 1” thredolet.

In pipes made of plastic materials (polyester, etc) the thermowell shall be flanged to the pipe with 1” NPT Female connection for the temperature element. The flange shall be 3” RF.

For installation in pipes, the following rules should be followed:

- Thermowells shall always be installed downstream of the pressure measurement connections
- They shall always be installed in straight vertical or horizontal sections (for installation in elbow see Figures bellow)
- In pipes of 3" in diameter and smaller, they shall be installed in horizontal or vertical sections, some examples are shown in Figures bellow.

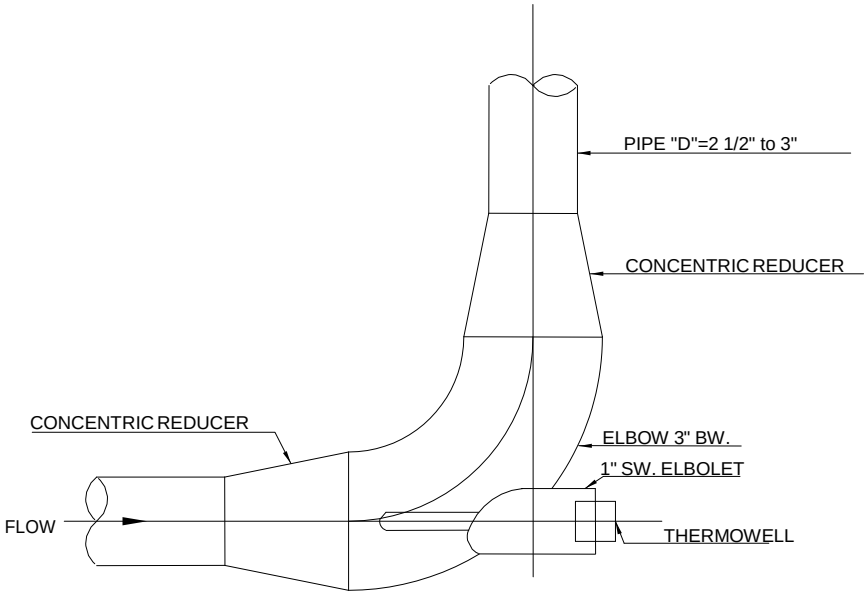

Pipes of 2½" to 3" in Diameter. Installed in Elbow

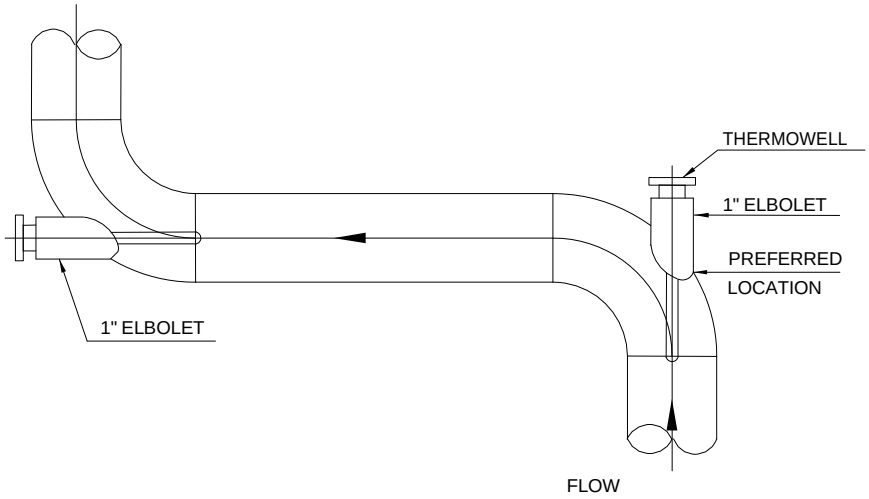

Pipes larger than 3" in Diameter. Installed in Elbow

FOR DIAMETER OF THIS PIPE

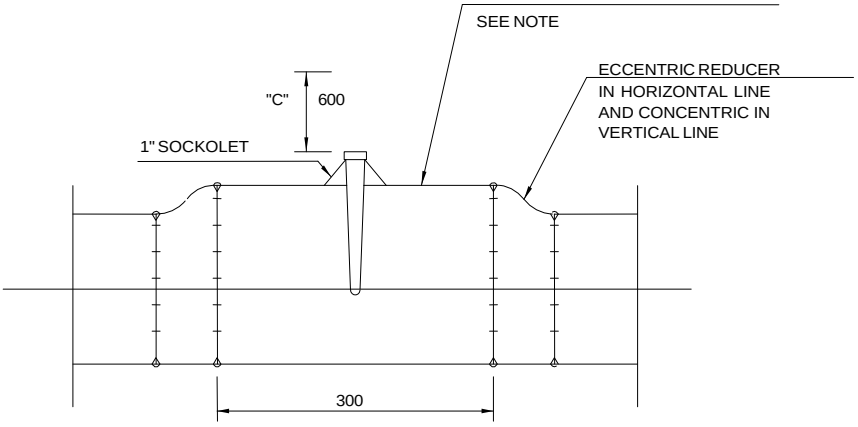

NOTES

- FOR D ≤ 2 ½" ENLARGE TO 3"
- "C" LEAVE FREE SPACE FOR DISMOUNTING APROX.: 600 mm.

Pipes ≤ 2½" in Diameter (Expansion with Reducers)

Thermocouple/thermowell vibration and stress calculations, according to ASME Power Test Code PTC 19.3 latest revision, shall be provided for each thermowell by the vendor.

3.5.4. THERMOSTATS

Thermostats shall be of the bimetallic or bulb type, as specified.

The bulbs and capillary tubes shall be made of stainless steel. The capillary tubes must be adequately protected.

Thermostats shall not contain mercury.

3.5.5. THERMOMETERS

Bimetallic thermometers shall be used for local temperature measurements. Gas filled thermometers with capillary shall be used when visibility is poor and for high-temperature applications.

The casing shall be made of stainless steel (AISI 316), it will be adjustable, designed to prevent the entry of dust and water, and 100 mm in diameter. Safety glass with a threaded retaining ring shall be used. The spheres shall be of white laminated plastic with lettering and function engraved in black.

Precision of thermometers shall be ± 0,5% of full scale.

3.6. LEVEL INSTRUMENTS

3.6.1. TRANSMITTERS

Differential pressure transmitters and electronic controllers mounted on the cabinets shall be used for level transmission and/or level regulation in general. Consideration will be given to the use of other systems (displacers, etc) only if necessary. Differential pressure transmitters shall not be used for processes under vacuum conditions unless provided with remote seals.

The characteristics of differential pressure transmitters are given in section 4.3.2 Differential Pressure Transmitters.

3.6.2. TRANSMITTERS-DISPLACERS

Whenever it is recommendable to install this type of transmitter, it shall either be external for lateral mounting or internal for mounting on top.

The chamber shall be made of cast steel with 1½" connections that are either flanged or socket welded (SW) in accordance with the applicable piping standard in the case of lateral mounting, and flanged 4" for mounting on top. The internal elements and the float shall be of stainless steel 316 with inconel torsion tube, in accordance with the requirements of ANSI B31.3.

3.6.3. LEVEL SWITCHES

Differential pressure switches can be used for level measurements in tanks.

When float switches are used, the body shall be of cast carbon steel and the internal elements and float shall be of stainless steel 316.

For lateral (external) mounting, the connections shall be 1" socket weld in accordance with the applicable piping standard. For mounting on top (internal), the connections shall be 4" flanged. Level switches shall be single-pole double-throw or double-pole double throw (SPDT or DPDT), as necessary. The coupling between the switch contacts and the float rod shall be magnetic.

Level switches shall not contain mercury.

3.6.4. GLASS LEVEL GAUGES

Reflecting (for clean, not coloured liquids) or transparent level gauges shall be used for process pressures up to 20 bar. The tubular type shall be used for atmospheric tanks.

All glass level gauges shall be of standard size and easily interchangeable.

They shall be supplied with ¾" NPT isolating valves. The bottom valve shall be of the fast-acting ball type, or similar, to prevent spillage of liquid in the event of the glass breaking.

Also in tanks with a pressure greater than atmospheric pressure, the upper valve should be fast-acting and fitted with vent and drain connections. Tubular type level gauges shall be provided with protective screens.

Consideration may be given in some cases to the advisability of using magnetically actuated level gauges that provide a greater definition of level and into which alarm switches can be incorporated. These type of level gauges shall be installed for process pressures above 20 bar.

3.7. VIBRATION MEASUREMENTS

The vibration monitoring system is recognised as an aid in the prevention of large-scale machinery catastrophes and in reducing shutdown costs. It is therefore advisable to include devices that annunciate anomalous movement of the most important plant equipment to the operator. For this purpous accelerometers, proximity, speed, position transducers, etc, shall be supplied to provide a rotating machine vibration measurement and a basis on which maintenance decisions can be made via the 4-20 mA analogue signal which will be transmitted to the DCS in order to carry out the analysis of vibrations.

According to his experience and usual practice, the supplier shall be able to suggest the vibration detectors in his proposal that will fit better with his equipments. Selection of a suitable vibration transmitter shall be based on the experience of the supplier of each equipment item in this field and considering the equipment specifications. For example, piezoelectric accelerometers, proximity, speed, position transducers, etc may be used. Special care shall be taken in the physical installation of the transducer. Improper installation can result in a change of the transducer amplitude and frequency response and/or the generation of signals that do not represent actual machine vibration.

In general equipment fed a 6.0 kV shall be equipped with two-wire vibration sensors per bearing, with 4-20 mA output signal, proportional to the vibration measurement variable (speed, acceleration, displacement, etc).

3.7.1. TWO-WIRE TRANSMITTERS

The transmitters shall be immune to radio frequency and electromagnetic interference in accordance with that established in EN 50081/82 EMC, and they shall be supplied with the official EC stamp and certificate of compliance.

The equipment supplied shall include the probes, transducers, cables (including the probe earth connection cable), calibration accessories, etc, necessary for correct transmitter operation and adjustment.

Each probe (speed, acceleration, etc) shall be supplied with a total of ten (10) metres of armoured cable. One end shall be fitted with a connector suitable for connection to the probe. The other end shall be fitted with a connector suitable for connection to the field sensor. The supplier shall install this cable in a solid conduit from the field sensor to the location of the probe.

The vibration detectors in each pump bearing, shall be selected according to the following requirements:

- If the bearing is a fluid-film bearing, so that, without balls, rollers… just with a lubricating oil film, two proximity transducer shall be supplied, with all the accessories needed for the correct connection between the vibration probe and the pump instrumentation junction box (probe, extension cable, sensor, etc). If a leak of fluid (oil, water, etc) over the extension cable zone is foreseen, an appropriate cable shall be supplied to avoid the liquid entry inside the extension cable. Connector protectors are recommended to provide increased environmental protection. Silicone tape should be used instead of connector protectors when the probe-to-extension cable will not be exposed to oil
- For roller bearings, ball bearings or similar ones, two vibration detector shall be supplied, with all the accessories needed for the correct connection between the vibration sensor and the pump instrumentation junction box (extension cable, transducer, etc).

The vibration instruments shall be protected against corrosion, erosion and degradation mechanisms. This criterion excludes spare parts such as seals, gaskets, packaging, bearings, heat instruments, lubrication materials, etc.

The bidder shall provide a list of spare parts required throughout the design life. Whenever possible, spare parts shall have a minimum life of five (5) years.

3.8. INSTALLATION OF INSTRUMENTS

3.8.1. GENERAL

The bidder shall provide the installation details of all instruments for approval.

In general, in accordance with the recommendations of ANSI B31.3, paragraph 322.3 the instrument discharge lines from the root valve and accessories (blowdown valves, isolation valve, test valves, etc) shall be designed to the pressure and temperature conditions of the line or equipment to which they are connected. In the

case of steam supply services, the design conditions shall be those that correspond to the steam pressure in the line or equipment to which they are connected and the corresponding saturation temperature.

The pipe shall generally be limited to sections from the root valve up to and including the condensate chambers (drum level measurements) or condensate Tees (all other cases).

Tubing (½" OD) shall have a wall thickness between 0.049" and 0.065" and be made of cold drawn stainless steel A-213 type 316L or A-269 type 316L, without welds, Rockwell B80 hardness, suitable for bending and free of scratches. The 0.049" thick tubing is suitable for working conditions of 2750 psi / 179 bar at 350ºC. The 0.065" thick tubing is suitable for working conditions of 3700 psi / 255 bar at 350ºC. The 0.065" thick tubing shall be used when welding is necessary.

Primary sensing lines for remote-mounted instruments in general shall be stainless steel tubing with stainless steel compression fittings for non-heavy duty service and stainless steel welded fittings for heavy duty service. A flexible element shall be used for the final connections to allow movement of up to 8 inches (203mm).

Tubing accessories shall be as follow:

- Compression/compression, compression/thread or compression/SW fittings. They shall have conic seats with double o-ring, ANSI B2.1 male-female threads. They shall be made of from A-182 Gr F316L bar or forged stainless steel, or low carbon F316.
- SW (Socket welded). They shall be made of A182 F316 L or Gr F316 stainless steel forged or in rolled bars with a low carbon content.

Stainless steel fittings should be used only with stainless steel tubing. The practice of mixing materials is not allowed. The only exception is brass fittings with copper tubing. Dissimilar materials in contact may be susceptible to galvanic corrosion. Further, different materials have different levels of hardness, and can adversely affect the fittings ability to seal on the tubing.

Globe valves and manifolds for pressure or differential pressure measurements shall have a 4000# / 275 bar rating up to 200ºC and 3000# / 207 bar rating up to 450ºC. Manifolds shall be as follow:

- Two-way three-valve (isolation and equalizing) manifolds shall be used for differential pressure measurements. A182 Gr F 316 stainless steel body and internals. Needle or punch-type shutters with anti-slewing gear in the valve- manifold joint. Suitable for direct coupling to transmitter, pipe mounting or wall mounting or for securing to mounting rack. Teflon packing up to 200ºC and grafoil up to 450ºC.

- One-way, two-valves (isolation and drain or test). manifolds shall be used for pressure measurements. A182 Gr F 316 stainless steel body and internals.
- Needle or punch-type shutters with anti-slewing gear in the valve-manifold joint. Suitable for direct coupling to transmitter, pipe mounting or wall mounting or for securing to mounting rack. Teflon packing up to 200ºC and Grafoil up to 450ºC.For pressure measurements

3.8.2. INSTRUMENT INSTALLATION REQUIREMENTS

Instrumentation systems shall be designed to facilitate fill, drainage, venting, scavenging, cleaning and testing. Instrument discharge lines shall be as short as possible and maximum length shall not exceed 15 m (APR RP 550).

Unless otherwise indicated in the typical installation details, each instrument discharge line shall have at least two valves between the process connection and the instrument. For locally mounted instruments, one root valve and one cut-off valve shall be located alongside the instrument.

It shall not be allowed to fix supports, brackets or clamps to the instrument discharge lines to support cable trays or any other type of equipment.

Instrument discharge line layout shall ensure that line operation is not affected by vibrations, fatigue or abnormal heating. Differential pressure instrument discharge lines shall be laid together to ensure that they are not affected differently by heat in the environment.

Curved pipe or tubing shall be used whenever possible, avoiding the use of 90º elbows which cause loss of instrument sensitivity. The minimum curve radius shall be established in accordance with the corresponding section of the ASME or ANSI code. When several instrument lines are laid in parallel, the joints shall be systematically stepped. The number of joints shall be reduced to as few as possible in accordance with good practice.

Compression fittings shall be installed in accordance with the manufacturer’s instructions.

Whenever tubing runs horizontally, the instrument lines running in parallel will be placed vertically one over the other in as much as possible. The layout will have as few changes of direction as possible, in accordance with the best practice and appearance.

All the instrument sensing lines will generally have a layout with a slope of at least 7.5%, unless otherwise specified. The slope from the process taps will be as follows:

- Steam: ascending from the root valve to the filling Tee to ensure that the condensate returns to the process line, and descending from

the filling Tee to the instrument to ensure there is always the same liquid column
- Liquid: descending to the instrument
- Air or gas: ascending to the instrument

Special attention will be paid to the correct location of the vents and drains, ensuring that they are located at the highest or lowest point of the piping or tubing layout

Tubing shall be connected after flushing and blowing operation.

Process piping or railings will not be used to support the instrument lines

The layout of the capillary tubes of the expansion systems will be independent from that of the rest of the lines and will be continuously supported by 30 x 30 mm steel corner joints with clamps in 0.5 meter intervals. The elbows will have a minimum radius of 100 mm. Any excess capillary will be carefully rolled to form a winding next to the measuring instrument. The windings will be adequately fixed and their diameter will be no less than 200 mm. The capillary must not be cut, bent or dismantled because this could cause permanent damage to the instrumentation.

The instrument sensing lines will be installed in such a way that they do not block passageways, access to instruments or other plant equipment.

The installation and layout of instrument sensing lines will be flexible enough to allow the instrument to be disconnected without removing any connection other than that of the instrument itself and to allow displacements and vibrations without causing undue fatigue to the assembly.

All the drain or vent connections will be oriented towards a safe direction, away from the operating posts or from access areas. All valves, including root valves, will be located in such a way that they can be accessed from the ground, platforms or stairs.

In some cases, the drains or discharge elements will need to be routed to floor level, especially if the instrument is located on an outdoor structure or inside a building.

High temperature process lines shall be provided with thermal expansion. Expansion part shall be provided on pipeline where process piping (root valve) may move by high temperature.

Instrument pipe loops and bends shall be installed with absorption of the thrust and torsion caused by thermal expansion.

The layout of the instrument sensing lines will be done in such a way that no siphons are formed and no access routes or passageways are obstructed. The whole length of the lines will be firmly attached to avoid shaking motion during discharge.

The instrumentation assembly contractor will be responsible for the manufacturer, supply and on-site assembly of the supports for the instrument sensing lines. Supports

of instrument tubing shall be provided with insulation plate for the instrument tubing tube protected damage included by corrosion.

The following criteria shall be used to determine discharge line support distances:

Size	Maximum Distance between Supports	Notes
½" tubing	2 metres	1
¾" tubing	1.5 metres	1
Copper tubing	Supported along complete length	2
½" or ¾" pipe	According to pipe support criteria	

NOTES:

1) Whenever possible, the instrument discharge lines shall be grouped so that the support is common to as many parallel lines as possible.

2) In general, distances greater than two (2) metres between the root valve and the end consumer shall be avoided. Instrument air distribution lines shall be in accordance with the associated pipe specification and shall be taken as near as possible to each consumer.

The vents will be routed to points located no lower than 3 meters over the working post or platforms. Special care must be taken to not perform the pressure relief of the fluids next to the air inlets to the ventilation systems.

The drain lines will be installed to have self-drainage. Whenever pockets cannot be avoided, drains will be provided at their bases.

If the installation is subjected to environmental temperatures below the freezing, condensing or precipitation points of the transmission fluid, the transducers and sensing line must be heated by means of electrical tracing.

With regard to erection and connection, special attention shall be paid to instruments located in classified areas.

Whenever differential pressure measurement instrumentation is used and the LP tap of the instrumentation is under vacuum conditions, special attention will be paid during assembly to prevent the accumulation of condensate in said tap.

All the threads will be sealed. The material to be used will depend on the temperature of the fluid, and will be as follows:

- T ≥ 200ºC: Grafoil
- T < 200ºC: Tetrafluoroethylene (Teflon) anaerobic tape or sealant

3.8.3. DETAIL ARRANGEMENT OF INSTRUMENT ASSEMBLY

3.8.3.1. Differential Pressure Instruments (Flow/⊗P) — Liquid Services

Tubing is directly connected to instrument manifold.

Whenever possible, the instruments shall be installed beneath the process fluid tap.

All threaded fittings shall be sealed with TFE anaerobic tape or sealant (200ºC limit). Seal welds may be used in special cases.

3.8.3.2. Differential Pressure Instruments (Flow/⊗P) — Air or Gas Supply Services

The instruments shall always be mounted above the process fluid connection so that any condensate that may form will be drained towards the process line.

3.8.3.3. Differential Pressure Instruments for Measuring Tank Levels

The instruments shall be mounted at the same level as the bottom tank tap to thus measure the maximum level. If this is not possible, the instrument must be zeroed to correct the corresponding pressure head.

All threaded fittings shall be sealed with TFE anaerobic tape or sealant (200ºC limit).

In the case of atmospheric drain tanks, the transmitter shall be coupled directly to the tank with a 2” flange. The low pressure tap of the instrument has to be free at atmospheric pressure.

In pressure tanks, the transmitter must always be installed beneath the tap. The instrument shall be supported on 2” tube.

3.8.3.4. Pressure Instruments —Liquid Services

Tubing is directly connected to instrument manifold.

The instrument will have to be zeroed to compensate the weight of the liquid column, since the instrument will generally be located beneath the process fluid tap.

3.8.3.5. Pressure Instruments — Gas or Vacuum Services

The instruments shall always be mounted above the process fluid tap, whether the pipe is horizontal or vertical

3.8.3.6. Local Pressure and Differential Pressure Indicators

These instruments shall be mounted directly on the pipe above the process fluid tap if the root valve is accessible. In these cases, a ½" NPTH tee with threaded cap shall be provided to check the calibration.

3.8.3.7. Mounting Structure for Instruments not Inserted in the Process Fluid

The mounting structure must not transmit stresses to the instrument or its connection fittings, such as discharge lines, signals and electric cables. The structure shall be designed so that the instrument can be mounted in the physical direction recommended by the manufacturer.

Nuts, bolts and other erection accessories shall be chemically and metallurgically compatible with the equipment, the structure and the environmental conditions of the erection area. Erection accessories shall be designed to withstand normal operating loads.

Materials prone to corrosion shall be duly protected against this phenomenon. Protective coats shall be resistant to the environmental conditions.

The protective coats shall be chemically and metallurgically compatible with the materials they protect.

The paints and protective coats used on mounting structures shall be flame resistant.

3.8.4. LOCATION OF INSTRUMENTS

The instruments shall be located in accessible areas to facilitate calibration, periodic tests, maintenance and replacement, and preferably at a height of 1500 mm from the floor or platforms. Suitable lighting, power outlets, water, compressed air and auxiliary services shall generally be provided close to the installation point.

The location of instruments (with respect to mounting structures, barriers and adjacent equipment) must take into account the free space necessary for mounting and removing of the protective covers of instruments and for using normal erection, calibration and service tools. The arrangement shall facilitate the removal and replacement of a complete instrument without disturbing the operation of instruments not associated with the control loop on which maintenance is being carried out; in other words, it shall not be necessary to take a control loop out of service to facilitate

replacement or maintenance of an instrument or auxiliary equipment on another control loop.

When locating an instrument, consideration must be given to its position with respect to the pipe or equipment connection point. Likewise, the discharge lines have to be as short as possible, avoiding lengths of more than 10 metres, although in exceptional cases lengths of up to 15 metres may be allowed.

All instruments located outdoors can be housed inside local boxes (either grouped or individual), unless it is physically impossible to do so. The remainder (those located indoors) shall be mounted on instrument racks.

Redundant sensors shall be connected to independent points of the process, for which the associated connections shall be provided.

The instruments shall be mounted in accordance with typical installation instructions (by instrument type, process conditions, and location with respect to tapping) to be sent to the package plant supplier after award of contract.

3.8.5. INSTRUMENT SUPPORT

All tools and supports for instruments and accessories shall be made of carbon steel.

The following anticorrosive treatment is recommended:

- Supports or fittings to be machined, welded and drilled, if possible before anticorrosive treatment
- Hot-dip galvanised after preparative treatment of the steel

Fittings and supports shall be secured to the structural or auxiliary parts of the facility with AISI-316 stainless steel nuts and bolts. Depending on each case, these shall be as follows:

- Threaded holes
- Through holes
- Stainless steel AISI-316 U-bolts, with stainless steel AISI-316 screws

Only when the above solutions prove to be impossible may the fittings and supports be welded. In this case, immediately after welding they shall be adequately cleaned and coated with cold galvanised paint if carried out on site.

If their location in the facility so require, the I&C components shall be protected either with steel plate or structural accessories treated as described previously, or with AISI-316 stainless steel if they are located in a high-corrosion area.

All control instruments –position, level, displacement, proximity, etc- shall be provided with supports with elongated drill holes to facilitate adjustment.

3.9. MEASUREMENT UNITS FOR INSTRUMENT SCALES

All instrument scales shall be in metric units using the International System of Units (SI). Other frequently used units shall be indicated in brackets, as shown in the following table.

MAGNITUDE	SYMBOL	UNIT
Level	m, cm, %	Metre, centimetre, percentage
Pressure (see note)	(bar, mbar) Pa	(Bar, millibar) Pascal
Temperature	K (ºC)	Kelvin (degrees Celsius)
Steam flow	t/h	Tonnes per hour
Liquid flow	m^3/h l/min kg/h t/h	Cubic metres per hour Litres per minute Kilograms per hour Tonnes per hour
Gas flow	Nm^3/h	Cubic metres per hour in normal conditions (0ºC, 1.01 bar)
Acidity	pH	Hydrogen ion activity
O_2 and CO_2 content in combustible gases	%	Percentage
Concentration	ppm	Part per million
Time	s	Seconds
Electrolytic conductivity	µS/cm	Micro Siemens per centimetre
Vibration	µm	Microns
Expansion, eccentricity	mm	Millimetre
Position	%	Percentage
Mass	kg	Kilograms
Electric current	A	Amperes
Frequency	Hz	Hertz
Energy, work	J	Joules
Power	W	Watts
Electric charge, quantity of electricity	C	Coulombs

Electric power, potential difference, voltage and electromotive force	V	Volts
Electrical capacitance	F	Farads
Electrical resistance	Ω	Ohms

Note: add letter "a" for absolute pressure.

4. CONTROL VALVES

Control valves shall be pneumatic modulating control valves or pneumatic on/off control valves.

Control valves shall be designed, manufactured and supplied in accordance with ANSI B31.3.

Control valves shall conform which the requirements of the European Directive 97/23/EC Pressure Equipment.

The end connections, body material and rating shall comply with the requirements of the line in which they are to be installed. In general, the ends of valves 2" and smaller shall be prepared for socket welds (SW) and the ends of valves larger than 2" shall be prepared for butt welds (BW).

The design of the valve body, bonnet and bolting shall conform to ANSI B16.34. Valve body shall not be less than the half of the diameter of the inlet pipe.

Wherever possible, globe valves with guide cage shall be used for throttling service, for on/off services single seated globe valves shall be used. In high-pressure circuits with valves subject to significant load losses, multi-chamber valves with flow rate reducer orifices shall be used. They shall not generate noise levels greater than 85 decibels to one (1) metre.

In no circumstances shall a manual hand wheel be used for emergency closing or safety interlock valves.

Pneumatic actuators shall be able to work with a 4 bar instrument air pressure. The normal working pressure will be 7 bar and the design pressure will be 16 bar.

The actuator shall be sized to cover the complete stroke of the plug in order to carry out complete, balanced modulation and to achieve the open and close conditions without oscillations. Actuators shall be sized for a minimum of 4 bar instrument air.

The internal elements (plug, seat, stem, guide, etc) shall be easy to replace without having to remove the valve from the pipe. The internals shall be made of stainless steel, hardened or stellited wherever there is a risk of erosion due to operating conditions.

Valves shall be sized per ISA S 75.01 or EN60534.

The valves shall have sufficient capacity to allow the passage of 110% of design flow and it shall be possible to control them with a flow less than the minimum required by the process. The operating range at maximum flow shall be between 70% and 90% of the complete stroke length.

Pneumatic actuated valves shall be supplied with accessories completely mounted. Pneumatic connections shall be ¼" NPT and electrical connections shall be ½" NPT. The material of the tubings of the pneumatic valves shall be stainless steel in accordance with ANSI B31.3 and the Pressure Equipment Directive (PED). A flexible element shall be used for the final connections to allow movement of up to 8 inches (203mm).

All the control valves and their associated elements shall be suitable for outdoor installation and resistant to corrosion due to environmental humidity. Their grade of protection shall be of at least IP65.

The fail-safe position of the valve will be when the power or air is not present. The following accessories shall be included for on/off service:

- Pilot solenoid valve
- Two (2) limit contact/switches (open and close)
- Air set
- Handwheel for local manual operation, where essential for maintenance purposes

The following accessories shall be included for throttling service:

- Electro-pneumatic smart positioner suitable for a 4-20 mA input signal, with inlet and outlet pressure gauges
- Valve position transmitter will be used for selected applications where the feedback is used in the control algorithm
- Air set
- Limit switches will be used for interlocks and as needed for special control or monitoring.
- Handwheels for local manual operation, where essential for maintenance purposes

5. MISCELLANEOUS EQUIPMENT

5.1. JUNCTION BOXES

Instrument boxes and accessories (packing, terminals, etc) located in areas at risk of explosion shall comply with the requirements of IEC 60079 and VDE 0165/170/171, or equivalent. They shall be supplied with ATEX Certificate of Conformance and official EC stamp.

Boxes and cabinets shall be made of polyester fibre or cast aluminium with IP54 (NEMA 4X) protection, IP65 if they are outdoors.

The junction boxes shall contain all the signals of the instruments and equipment that interface with the DCS. The bidder / successful bider shall comply with and complete that indicted in Appendix B with respect to the number, type and identification of signals.

The boxes shall be supplied with 100 x 20 mm white laminated plastic nameplates engraved with black lettering. They shall be secured with screws or rivets.

The metal parts of the boxes shall be earthed by means of an M8 x 30 mm stainless steel screw secured to the side of the box with two bolts, one for tightening and the other for securing the external earth connection.

The terminals for instrumentation and control cables shall be provided with Weidmuller SAK 2.5 / 35 flanged connections, or similar. The number of terminals and conduits shall be that indicated in the attached list. The terminals shall be numbered consecutively starting from 1.

- For analogue signals: Junction box for outdoor installation, for 4-20 mA signals, outdoor service, each supplied complete with terminals (2 wires plus shield per signal)
- For binary signals: Junction box for outdoor installation, for process switch binary signals, outdoor service, each supplied complete with terminals (2 wires per signal plus common per cable shield)
- For thermocouples (without transmitter): Thermocouple centralisation boxes for outdoor installation, with terminals made of suitable material (depending on the type of thermocouple). Thermocouples shall be wired with thermocouple extension cable up to the receivers

5.2. TERMINAL POINTS

With the objective of standardize the interface between Mechanical Equipment (ME) and the rest of the Plant, Mechanical Equipments shall be included in the Equipment Module concept.

This concept establishes a virtual envelope that has pre-determined interface/terminal points that allows the project development to be independent of the Mechanical Equipment supplier.

For this purpose tables included in Appendix A shall be sent to the supplier for his acceptance, compliance and completion.

6. DOCUMENTATION

The documentation considered as critical for the Purchaser, should be considered by the Supplier as top priority and be submitted at the earliest date after the kick-off meeting and not later than the time stipulated below.

The following documentation shall be supplied, as a minimum:

PROJECT DOCUMENTATION		SCHEDULE SUBMITTAL				
			POST-AWARD			Final
ITEM	DESCRIPTION OF REQUIRED TECHNICAL DOCUMENTS	PROPOSAL	Information or approval	Critical Doc.	Nº of weeks after KOM	Certificate
1. INSTRUMENTATION						
1.1 List (1)		X	Approval	Yes	4	
1.2 Datasheets			Approval	Yes	4	
1.3 Primary flow elements calculation			Approval	Yes	4	
1.4 Instruments location drawing			Approval		8	
1.5 Hook-up drawings (2)			Approval		8	
1.6 Calibration and test certificates			Information		4 BS	Yes
1.7 EC declaration of conformity (3)			Information	Yes	4 BS	Yes
1.8 Instrument operation/maintenance manual			Information		1BS	
2. CONTROL VALVES						
2.1 List (1)		X	Approval	Yes	4	
2.2 Datasheets with calculations			Approval		4	
2.3 Dimensions outline drawings with pneumatic circuit			Information		8	
2.4 Valve operation/maintenance manual			Information		1 BS	
3. CONTROL						
3.1 Functional description (4)		X	Approval	Yes	4	
3.2 Alarm and trip values for every mechanical equipment			Information	Yes	8	
4. INSTRUMENTATION JUNCTION BOXES						
4.1 Outline drawing (5)			Approval		8	
4.2 Wiring and connection drawings (6)			Approval	Yes	8	
5. PUMP AND MOTOR JUNCTION BOX						
5.1 Outline drawing (5)			Approval		8	
5.2 Wiring and connection drawing (6)			Approval	Yes	8	
6. GENERAL						
6.1 Exception List		X	--			
6.2 Catalog and Technical information of instrument and control valves		X	--			
6.3 Descriptive document for the instrinsic safety system conforming to EN50020 (when applicable)			Information		8	
6.4 Test and inspection procedures			Approval		8	
6.5 Material certificates (7)			Information		1 BS	Yes
6.6 Vendor list for instruments and control valves		X	--			

KOM: Kick-off meeting.
BS: Before shipment

1) This list shall include all calibrated range and set point adjuinsted for each individual instrument. This list shall include 94/9/EC ATEX Directive category when aplicable. This list shall be prepared using Microsoft Access or Excel format, and shall be provided after award of contract. The list of instruments shall contain at least the fields detailed in Appendix E of this specification.
2) Including pneumatic connection for every air-operated valve.
3) For all the applicable european directives, in particular to the European Pressure Equipment Directive (PED) (97/23/EC), the Electro Magnetic Compatibility (EMC) (89/336/EEC) and ATEX Directive (94/9/EC).
4) Equipment control philosophy to be developed in the DCS including requirements for the start-up, shutdown, trips, interlocks, monitoring and protection
5) With mounting and connections details.
6) From the field device to centralisation boxes, showing the cable number and the terminal points designations for external connections.
7) Material certificates (tubing and accesories) for process instruments installation. Material certificate of electrical wire with tefzel insulation

7. INSTRUMENTATION TEST AND INSPECTION

7.1. TEST

Tests shall be as per applicable standards and regulations or manufacturer's procedures approved by the Engineer.

Tests shall be performed, as practical, in a final installed condition.

The Purchaser reserves the right to witness the FAT. Whether or not these tests are witnessed by the Purchaser or by persons delegated by him does not relieve the Supplier of the responsibilities for any malfunction of the goods supplied.

The Supplier shall be responsible for carrying out the acceptance tests.

Minimal test, apart from the specific and performance tests detailed in the main equipment specification, shall be the following:

- Electrical conductors continuity
- Electrical cables and equipment insulation resistance
- Process instruments installation hydrostatic test
- Instrumentation valves operation (no leakage through the isolated component)
- Functional tests. Shall be verify the settings of devices per requirements of the device summary or product specification by activating devices in an installed condition; confirm change in switch state at the junction box
- Stroke all valves
- Verify operation of electrical devices such as transmitters confirming electrical output

7.2. INSPECTIONS

Inspections shall be as per the suppliers final documentation approved by the Engineer:

- Electrical interface drawings
- Junction boxes drawings
- Process instrumentation installation
- Wire number marking and terminal board marking
- Junction boxes locations including provisions for customer conduit/cable entry
- Tagging and component identification

APPENDIX A

TERMINAL POINTS

MECHANICAL EQUIPMENT PURCHASE SPECIFICATION No.:

	TERMINAL POINT (3)	DESCRIPTION (4)	LOCATION (5)			CONNECTIONS				BOX ID (10)	NOTES
			X	Y	Z	TYPE (6)	No.(7)	SIZE (8)	CIRCUIT LEVEL (9)		
REQUIRED (1)											
RECOMMENDED (2)											

NOTES:
(1) These terminal points must be provided, exceptions must be justified in section below
(2) Terminal points not required but recommended by the supplier
(3) Terminal point shall be identified as TP I-nn, where I is for I&C terminal point and nn is a sequential number
(4) Description of the terminal point: Motor Instrumentation terminal box, …
(5) Coordinates 0,0,0 shall be clearly stated and shall be a fixed point in the Mechanical Equipment
(6) L = Lug; C = Conduit; G = Gland connection
(7) Indicate quantity of connections of the same type and size
(8) Indicate size of the connection: inches for conduit, …
(9) M: Medium voltage; B: Low voltage; C: Control; Y: Instrumentation
(10) If terminal point is a box, indicate Identification of the box

Exceptions:

MECHANICAL EQUIPMENT PURCHASE SPECIFICATION No.:

BOX ID (1)			
BOX SERVICE (2)			
SIGNAL DESCRIPTION (3)	SIGNAL ID (4)	TERMINAL POINT ID (5)	NOTES

NOTES:
(1) Indicate identification of the box
(2) Indicate box description
(3) Indicate signal description
(4) Indicate identification of the signal
(5) Indicate wire terminal identification and corresponding board

Exceptions:

APPENDIX B

INTERCHANGED (HARDWIRED) SIGNALS BETWEEN DCS AND MECHANICAL EQUIPMENT

INTERCHANGED (HARDWIRED) SIGNALS BETWEEN INTEGRATED CONTROL SYSTEM (DCS) AND MECHANICAL EQUIPMENT (ME) MECHANICAL EQUIPMENT PURCHASE SPECIFICATION No.:

	SIGNAL ID	DESCRIPTION	TYPE (3)	CHARACTERISTDCS (4), (5), (6), (7)	SUPPLIED (8)
REQUIRED (1)					
RECOMMENDED (2)					

NOTES:
(1) These signals must be provided, exceptions must be justified in section below
(2) Signals not required but recommended by the bidder in the base bid or in options
(3) AI: Analogue input signal from ME to DCS. AO: Analogue output signal from DCS to ME. DI: Binary input signal from ME to DCS. DO: Binary output signal from DCS to ME
(4) AI shall be two wire loop-powered circuits. Electric range 4 to 20 mA. Power supplied from DCS at 24 V dc. DCS plus cable load impedance <= 500 ohms
(5) AO shall be two wire loop-powered circuits. Electric range 4 to 20 mA. Power supplied from DCS at 24 V dc. ME plus cable load impedance <= 500 ohms
(6) DI shall be from a dry contact located in the ME. Powered from DCS at 48 Vdc. Load in DCS max. circuit current 100 mA
(7) DO shall be from a dry contact located in the DCS. Powered from ME at 24 Vdc or 48 Vdc. Load in ME max circuit current 100 mA, provide arresting diode for inductive load.
(8) Mark with X if included in the supply

Exceptions:

PIPING SPECIFICATION ANNEX 2
VALVE SPECIFICATION

ARVAND KAVEH STEEL COMPLEX

HOT ROLLING MILL PLANT

SARTECH Engineering, S.L. - C.I.F. (ES) B20927521

Document Number:

ANNEX 1

Revision History

Rev	Revision Date	Created by	Checked by	Approved by	Description
00	09/01/2015	E.D.C.	J.G.	J.G.	Initial edition
01	16-03-2015	E.D.C.	J.G.	J.G.	Second edition
02	18-09-2015	D.B.	I.G.	J.G.	New revision

SARRALLE
Equipos Siderúrgicos

ARVAND KAVEH STEEL COMPLEX

Valves Specification

PIPING SPECIFICATION	VALVE SPECIFICATION	TYPE OF VALVE	PAGE	REV.	DATE
D16A	D16ABA01	BALL	PAG 1	1	15/09/2015
D16A	D16ABA02	BALL	PAG 2	1	15/09/2015
D16A	D16ABA03	3WAY BALL	PAG 3	1	15/09/2015
D16A	D16AGL02	GLOBE	PAG 4	0	15/09/2015
D16A	D16ABF01	BUTTERFLY	PAG 5	1	15/09/2015
D16A	D16ACK02	CHECK	PAG 6	1	15/09/2015
PIPING SPECIFICATION	**VALVE SPECIFICATION**	**TYPE OF VALVE**	**PAGE**	**REV.**	**DATE**
D16B	D16BBA01	BALL	PAG 7	1	15/09/2015
D16B	D16BBA02	BALL	PAG 8	1	15/09/2015
D16B	D16BCK02	CHECK	PAG 9	0	15/09/2015
PIPING SPECIFICATION	**VALVE SPECIFICATION**	**TYPE OF VALVE**	**PAGE**	**REV.**	**DATE**
D25A	D25ABA01	BALL	PAG 10	0	15/09/2015
D25A	D25ABA02	BALL	PAG 11	0	15/09/2015
PIPING SPECIFICATION	**VALVE SPECIFICATION**	**TYPE OF VALVE**	**PAGE**	**REV.**	**DATE**
S40A	S40ABA01	BALL	PAG 12	1	15/09/2015
S40A	S40ABA02	BALL	PAG 13	1	15/09/2015
PIPING SPECIFICATION	**VALVE SPECIFICATION**	**TYPE OF VALVE**	**PAGE**	**REV.**	**DATE**
G16A	G16ABA01	BALL	PAG 14	1	15/09/2015
G16A	G16ABA02	BALL	PAG 15	1	15/09/2015
G16A	D16ABF01	BUTTERFLY	PAG 16	1	15/09/2015
G16A	G16ACK02	CHECK	PAG 17	1	15/09/2015
PIPING SPECIFICATION	**VALVE SPECIFICATION**	**TYPE OF VALVE**	**PAGE**	**REV.**	**DATE**
S16A	S16ABA01	BALL	PAG 18	1	15/09/2015
PIPING SPECIFICATION	**VALVE SPECIFICATION**	**TYPE OF VALVE**	**PAGE**	**REV.**	**DATE**
D16H	D16HCK01	CHECK	PAG 19	0	15/09/2015

NOTES

Note 1: This valve specification is only for interconection pipes between T.O.P. of lasco and the conection with the machine.

Equipos Siderúrgicos

ARVAND KAVEH STEEL COMPLEX

Valve

Type	Ball valve	Diameter Range	DN 15- DN 50
Nominal Rating	DIN PN 16	Symbol number	D16ABA01

Pressure - Temperature Limits

																CERT. TYPE	NOTE REF.
Pressure (barg)	16																
Temperature (ºC)	80																

Especification

Service	Indirect close cooling water 35c (QW35), Indirect close cooling water 50c (QW50), Direct cooling water (KW), Indirect open cooling water(CW), Emergency water (EW), Fire fighting water (FW), Compresed air (CA)		
Description	Side entry, full bore, floating solid ball Replaceable soft seats Bi-directional sealing Three pieces bolted construction. Anti blow out proof stem design Antistatic device		
General	Design shall comply with BS 5351		
Face to face dimension	Manufacturer Standard		
End conections	Threaded according to DIN 2999		
Corrosion allowance	1 mm		

Materials

Body	ASTM A105	EN 10204	Note 6
Ball	SS AISI 316	EN 10204	Note 6
Seat seal	REINF. PTFE "S"		Note 6
Packing ring	GRAPHITE		Note 6
Stem	SS AISI 316	EN 10204	Note 6
End connections	ASTM A105	EN 10204	Note 6
Body seal	VITON		Note 6
Pressure testing	UNI EN 20204 TYPE 3,1B		Note 1
Hydrostatic			Note 1
Marking	MSS SP25		Note 1
Leak test			Note 1

Actuators

Maximum differential pressure	Max design pressure for all sizes and types of actuator												
MANUAL (ISV)	SIZES	UP TO DN 50	HANDLE	CARBON STEEL GALVANIZED WITH PLASTIC COVER									
	Maximum pull 35 kg and 1000 revolutions												
ELECTRIC MOTOR (MOV)	POWER SUPPLY	400V / 50Hz / 3 phase		ENCLOSURE	IP65								
	AREA CLASSIFICATION	NON CLASSIFITED	CLASS		ZONE		GROUP		TEMP				
	LIMIT SWITCHES	OPEN	CLOSE	HANDWHEEL	YES		ACTUATION TIME						Note 1
	JUNCTION BOX												
NEUMATIC ACTUATOR (AOV)	SIMPLE EFECT	YES											
	FAIL ACTION	THIS INFORMATION APPEAR IN THE VALVE LIST											
	AREA CLASSIFICATION	NON CLASSIFITED	CLASS		ZONE		GROUP		TEMP				
	LIMIT SWITCHES	OPEN	CLOSE	HANDWHEEL	YES		ACTUATION TIME						Note 1
	AIR PRESSURE	7 bar		REGULATION FILTER		MANOMETER							
	ELECTRONIC VALVE POWER SUPPLY			24Vcc									
	BRACKETS			ACCORDING ISO 5211 IN STAINLESS STEEL									

NOTES

Note 1: To be filled by manufacturer

Note 2: Life of valve 30 years in cyclical service (24.000 cicles)

Nota 3: Noise at 1 meter is below of 85 Db

Nota 4: We need technical specification of painting

Note 5: Confirm which kind of seals will you supply for our valves

Note 6: Minimum Valve Material (the supplier may propose other material but only if the mechanical properties are better than the proposed).

Equipos Siderúrgicos

ARVAND KAVEH STEEL COMPLEX

Valve

Type	Ball valve	Diameter Range	DN 65- DN 200
Nominal Rating	DIN PN 16	Symbol number	D16ABA02

Pressure - Temperature Limits

																CERT. TYPE	NOTE REF.
Pressure (barg)	16																
Temperature (ºC)	80																

Especification

Service	Indirect close cooling water 35c (QW35), Indirect close cooling water 50c (QW50), Direct cooling water (KW), Indirect open cooling water(CW), Emergency water (EW), Fire fighting water (FW), Compresed air (CA)		
Description	Side entry, full bore, floating ball Replaceable seats Bi-directional sealing Two parts body valve ISO 5211 mounting flange		
General	Design shall comply with DIN 3357		
Face to face dimension	According to DIN 3202 F18 (EN 558 SERIE 27)		
End conections	Flanged according to DIN EN 1092-1		
Corrosion allowance	1 mm		

Materials

Body	EN-GJL-250 (Grey Cast Iron)	EN 10204	Note 6
Ball	AISI 410	EN 10204	Note 6
Seat seal	PTFE		Note 6
Packing ring	GRAPHITE		Note 6
Stem	AISI 303	EN 10204	Note 6
End connections	EN-GJL-250 (Grey Cast Iron)	EN 10204	Note 6
Pressure testing	DIN 3230 (BS 6755 PART 1)		Note 1
Hydrostatic			Note 1
Leak test			Note 1

Actuators

Maximum differential pressure	Max design pressure for all sizes and types of actuator												
MANUAL (ISV)	SIZES	FROM DN 50 TO DN 200		WRENCH	NODULAR IRON								
	Maximum pull 35 kg and 1000 revolutions												
ELECTRIC MOTOR (MOV)	POWER SUPPLY	400V / 50Hz / 3 phase		ENCLOSURE	IP65								
	AREA CLASSIFICATION	NON CLASSIFITED	CLASS		ZONE		GROUP		TEMP				
	LIMIT SWITCHES	OPEN	CLOSE	HANDWHEEL	YES		ACTUATION TIME						Note 1
	JUNCTION BOX												
NEUMATIC ACTUATOR (AOV)	SIMPLE EFECT	YES											
	FAIL ACTION	OPEN		CLOSE									
	AREA CLASSIFICATION	NON CLASSIFITED		CLASS		ZONE		GROUP		TEMP			
	LIMIT SWITCHES	OPEN	CLOSE	HANDWHEEL	YES		ACTUATION TIME						Note 1
	AIR PRESSURE	7 bar		REGULATION FILTER		MANOMETER							
	ELECTRONIC VALVE POWER SUPPLY			24Vcc									

NOTES

Note 1: To be filled by manufacturer

Note 2: Life of valve 30 years in cyclical service (24.000 cicles)

Nota 3: Noise at 1 meter is below of 85 Db

Nota 4: We need technical specification of painting

Note 5: Confirm which kind of seals will you supply for our valves

Note 6: Minimum Valve Material (the supplier may propose other material but only if the mechanical properties are better than the proposed).

Equipos Siderúrgicos

ARVAND KAVEH STEEL COMPLEX

Valve

Type	3 way ball valve	**Diameter Range**	DN 25- DN 200
Nominal Rating	DIN PN 16	**Symbol number**	D16ABA03

Pressure - Temperature Limits

																CERT. TYPE	NOTE REF.
Pressure (barg)	16																
Temperature (ºC)	80																

Especification

Service	Indirect close cooling water 35c (QW35), Indirect close cooling water 50c (QW50), Direct cooling water (KW), Indirect open cooling water(CW), Emergency water (EW), Fire fighting water (FW), Compresed air (CA)		
Description	Multiport, full bore, floating ball Replaceable seats Type 3 way inverted T port (Flow entry and exit in the same alingment ports in normal operation, and by pass in the tangencial port) ISO 5211 mounting flange		
General	Design shall comply with ASME B16,34		
Face to face dimension	According to Manufacturer Standard		
End conections	Flanged according to DIN EN 1092-1		
Corrosion allowance	1 mm		

DIAGRAM

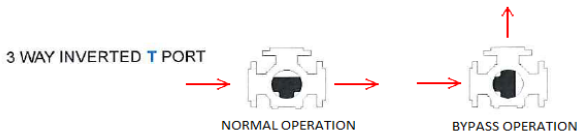

Materials

Body	1.0619 (ASTM A216 GRB)	EN 10204	Note 6
Ball	A351 CF8M	EN 10204	Note 6
Seat ring	PTFE		Note 6
Stem packing	GRAPHITE		Note 6
Stem	A479 Type 316	EN 10204	Note 6
End connections	1.0619 (ASTM A216 GRB)	EN 10204	Note 6
Pressure testing	ISO 5208		Note 1
Hydrostatic			Note 1
Leak test			Note 1

Actuators

Maximum differential pressure	Max design pressure for all sizes and types of actuator																	
MANUAL (ISV)	SIZES	FROM DN 50 TO DN 200			WRENCH	NODULAR IRON												
	Maximum pull 35 kg and 1000 revolutions																	
ELECTRIC MOTOR (MOV)	POWER SUPPLY	400V / 50Hz / 3 phase			ENCLOSURE	IP65												
	AREA CLASSIFICATION	NON CLASSIFITED		CLASS		ZONE		GROUP		TEMP								
	LIMIT SWITCHES	OPEN	CLOSE	HANDWHEEL	YES		ACTUATION TIME											Note 1
	JUNCTION BOX																	
NEUMATIC ACTUATOR (AOV)	SIMPLE EFECT	YES																
	FAIL ACTION	OPEN		CLOSE														
	AREA CLASSIFICATION	NON CLASSIFITED		CLASS		ZONE		GROUP		TEMP								
	LIMIT SWITCHES	OPEN	CLOSE	HANDWHEEL	YES		ACTUATION TIME											Note 1
	AIR PRESSURE	7 bar		REGULATION FILTER		MANOMETER												
	ELECTRONIC VALVE POWER SUPPLY			24Vcc														
	BRACKETS			ACCORDING ISO 5211 IN STAINLESS STEEL														

NOTES

Note 1: To be filled by manufacturer

Note 2: Life of valve 30 years in cyclical service (24.000 cicles)

Nota 3: Noise at 1 meter is below of 85 Db

Nota 4: We need technical specification of painting

Note 5: Confirm which kind of seals will you supply for our valves

Note 6: Minimum Valve Material (the supplier may propose other material but only if the mechanical properties are better than the proposed).

Equipos Siderúrgicos

ARVAND KAVEH STEEL COMPLEX

Valve

Type	Globe valve	Diameter Range	DN 65- DN 250
Nominal Rating	DIN PN 16	Symbol number	D16AGL02

Pressure - Temperature Limits

																CERT. TYPE	NOTE REF.
Pressure (barg)	16																
Temperature (ºC)	80																

Especification

Service	Indirect close cooling water 35c (QW35), Indirect close cooling water 50c (QW50), Direct cooling water (KW), Indirect open cooling water(CW), Emergency water (EW), Fire fighting water (FW), Compresed air (CA)		
Description	Swiveling plug, disc or ball Bolted bonnet and gland Risisng stem Renewable seat Non rotating stem		
General	Design shall comply with DIN 3352		
Face to face dimension	According to EN 558-1 Serie 1 (ex DIN 3202 F1)		
End conections	DIN EN 1092-1		
Corrosion allowance	1 mm		

Materials

Body	GG25	EN 10204	Note 6
Disk	GG25	EN 10204	Note 6
Stem	13% Cr	EN 10204	Note 6
Gasket/Rings	Graphite		Note 6
Bonnet	GG25	EN 10204	Note 6
Bolt	Carbon Steel		Note 6
Seat	13%Cr	EN 10204	Note 6
Pressure testing	API 598		Note 1
Hydrostatic			Note 1
Leak test			Note 1

Actuators

Maximum differential pressure	Max design pressure for all sizes and types of actuator																	
MANUAL (ISV)	SIZES	FROM DN 50 TO DN 200			WHEEL	ASTM A 106 CL B												Note 1
	Maximum pull 35 kg and 1000 revolutions																	
ELECTRIC MOTOR (MOV)	POWER SUPPLY	400V / 50Hz / 3 phase				ENCLOSURE	IP65											
	AREA CLASSIFICATION	NON CLASSIFITED			CLASS		ZONE		GROUP		TEMP							
	LIMIT SWITCHES	OPEN	CLOSE	HANDWHEEL		YES		ACTUATION TIME										Note 1
	JUNCTION BOX																	
NEUMATIC ACTUATOR (AOV)	SIMPLE EFECT	YES																
	FAIL ACTION	OPEN		CLOSE														
	AREA CLASSIFICATION	NON CLASSIFITED			CLASS		ZONE		GROUP		TEMP							
	LIMIT SWITCHES	OPEN	CLOSE	HANDWHEEL		YES		ACTUATION TIME										Note 1
	AIR PRESSURE	7 bar		REGULATION FILTER			MANOMETER											
	ELECTRONIC VALVE POWER SUPPLY			24Vcc														

NOTES

Note 1: To be filled by manufacturer
Note 2: Life of valve 30 years in cyclical service (24.000 cicles)
Nota 3: Noise at 1 meter is below of 85 Db
Nota 4: We need technical specification of painting
Note 5: Confirm which kind of seals will you supply for our valves
Note 6: Minimum Valve Material (the supplier may propose other material but only if the mechanical properties are better than the proposed).

Equipos Siderúrgicos

ARVAND KAVEH STEEL COMPLEX

Valve

Type	Butterfly valve	Diameter Range	DN 65- DN 400
Nominal Rating	DIN PN 16	Symbol number	D16ABF01

Pressure - Temperature Limits

																CERT. TYPE	NOTE REF.
Pressure (barg)	16																
Temperature (ºC)	80																

Especification

Service	Indirect close cooling water 35c (QW35), Indirect close cooling water 50c (QW50), Direct cooling water (KW), Indirect open cooling water(CW), Emergency water (EW), Fire fighting water (FW), Compresed air (CA)		
Description	Butterfly Wafer type valve One piece, bi-directional		
General	Design shall comply with DIN PN16		
Face to face dimension	According to EN 558 Serie 20 (DIN 3202 part 3, K1 serie)		
End conections	DIN EN 1092-1 - Wafer type valve		
Corrosion allowance	1 mm		

Materials

Body	NODULAR CAST IRON GGG 50	EN 10204	Note 6
Disk	A351 Gr CF8M	EN 10204	Note 6
Shaft	SS AISI 420	EN 10204	Note 6
Gasket/Rings	EPDM		Note 6
Seat	EPDM		Note 6
Pressure testing	API 598		Note 1
Hydrostatic			Note 1
Leak test			Note 1

Actuators

Maximum differential pressure	Max design pressure for all sizes and types of actuator																	
MANUAL (ISV)	SIZES	UP TO DN 200			HAND DRIVE LEVER (9 POSITIONS)				CARBON STEEL/PLASTIC									Note 1
	SIZES	FROM DN 250 TO DN 400			GEAR OPERATED				SHELL OF GGG 50									Note 1
	Maximum pull 35 kg and 1000 revolutions																	
ELECTRIC MOTOR (MOV)	POWER SUPPLY	400V / 50Hz / 3 phase				ENCLOSURE		IP65										
	AREA CLASSIFICATION	NON CLASSIFITED	CLASS			ZONE		GROUP		TEMP								
	LIMIT SWITCHES	OPEN	CLOSE	HANDWHEEL		YES		ACTUATION TIME										Note 1
	JUNCTION BOX																	
NEUMATIC ACTUATOR (AOV)	SIMPLE EFECT	YES																
	FAIL ACTION	OPEN		CLOSE														
	AREA CLASSIFICATION	NON CLASSIFITED	CLASS			ZONE		GROUP		TEMP								
	LIMIT SWITCHES	OPEN	CLOSE	HANDWHEEL		YES		ACTUATION TIME										Note 1
	AIR PRESSURE	7 bar		REGULATION FILTER		MANOMETER												
	ELECTRONIC VALVE POWER SUPPLY			24Vcc														

NOTES

Note 1: To be filled by manufacturer

Note 2: Life of valve 30 years in cyclical service (24.000 cicles)

Nota 3: Noise at 1 meter is below of 85 Db

Nota 4: We need technical specification of painting

Note 5: Confirm which kind of seals will you supply for our valves

Note 6: Minimum Valve Material (the supplier may propose other material but only if the mechanical properties are better than the proposed).

SARRALLE
Equipos Siderúrgicos

ARVAND KAVEH STEEL COMPLEX

Valve

Type	Check valve	**Diameter Range**	DN 40- DN 400
Nominal Rating	DIN PN 16	**Symbol number**	D16ACK02

Pressure - Temperature Limits

																	CERT. TYPE	NOTE REF.
Pressure (barg)	16																	
Temperature (ºC)	80																	

Especification

Description	Non Return Disc valve double plate Wafer PN 16 Metal/elastomer-seated Single-piece wafer-type body for long operating reliability and corrosion protection		
General	Design shall comply with EN 12334		
Face to face dimension	According to DIN 3202 K3		
End conections	DIN EN 1092-1 - Wafer type valve		
Corrosion allowance	1 mm		

Materials

Body	GGG50	EN 10204	Note 6
Disc	ASTM AISI 316	EN 10204	Note 6
Stem	AISI 420	EN 10204	Note 6
Gasket	NBR		
Pressure testing	API 598		Note 1
Hydrostatic			Note 1
Leak test			Note 1

Actuators

NOTES	
	Note 1: To be filled by manufacturer
	Note 2: Life of valve 30 years in cyclical service (24.000 cicles)
	Nota 3: Noise at 1 meter is below of 85 Db
	Nota 4: We need technical specification of painting
	Note 5: Confirm which kind of seals will you supply for our valves
	Note 6: Minimum Valve Material (the supplier may propose other material but only if the mechanical properties are better than the proposed).

Equipos Siderúrgicos

ARVAND KAVEH STEEL COMPLEX

Valve

Type	Ball valve	**Diameter Range**	DN 15- DN 50
Nominal Rating	DIN PN 16	**Symbol number**	D16BBA01

Pressure - Temperature Limits

																CERT. TYPE	NOTE REF.
Pressure (barg)	16																
Temperature (ºC)	80																

Especification

Service	Natural gas (GN)		
Description	Side entry, full bore, floating solid ball Replaceable soft seats Bi-directional sealing Three pieces bolted construction. Anti blow out proof stem design Antistatic device		
General	Design shall comply with BS 5351		
Face to face dimension	According to DIN 3202-2		
End conections	Threaded according to DIN 2999		
Corrosion allowance	1 mm		

Materials

Body	ASTM A105	EN 10204	Note 6
Ball	SS AISI 316	EN 10204	Note 6
Seat seal	REINF. PTFE "S"		Note 6
Packing ring	GRAPHITE		Note 6
Stem	SS AISI 316	EN 10204	Note 6
End connections	ASTM A105	EN 10204	Note 6
Body seal	VITON		Note 6
Antistatic stem	SS AISI 316	EN 10204	Note 6
Pressure testing	API 598		Note 1
Hydrostatic			Note 1
Leak test			Note 1

Actuators

Maximum differential pressure	Max design pressure for all sizes and types of actuator																								
MANUAL (ISV)	SIZES	UP TO DN 50		HANDLE		CARBON STEEL GALVANIZED WITH PLASTIC COVER																			
	Maximum pull 35 kg and 1000 revolutions																								
ELECTRIC MOTOR (MOV)	POWER SUPPLY	400V / 50Hz / 3 phase				ENCLOSURE	IP65																		
	AREA CLASSIFICATION	NON CLASSIFITED		CLASS		ZONE		GROUP		TEMP															
	LIMIT SWITCHES	OPEN	CLOSE	HANDWHEEL		YES		ACTUATION TIME																	Note 1
	JUNCTION BOX																								
NEUMATIC ACTUATOR (AOV)	SIMPLE EFECT	YES																							
	FAIL ACTION	OPEN		CLOSE																					
	AREA CLASSIFICATION	NON CLASSIFITED		CLASS		ZONE		GROUP		TEMP															
	LIMIT SWITCHES	OPEN	CLOSE	HANDWHEEL		YES		ACTUATION TIME																	Note 1
	AIR PRESSURE	7 bar		REGULATION FILTER		MANOMETER																			
	ELECTRONIC VALVE POWER SUPPLY			24Vcc																					

NOTES

Note 1: To be filled by manufacturer

Note 2: Life of valve 30 years in cyclical service (24.000 cicles)

Nota 3: Noise at 1 meter is below of 85 Db

Nota 4: We need technical specification of painting

Note 5: Confirm which kind of seals will you supply for our valves

Note 6: Minimum Valve Material (the supplier may propose other material but only if the mechanical properties are better than the proposed).

Note 7:The supplier shall comply with the specified requirements of this data sheet. The valves impacted by potentially explosive atmospheres shall be

ARVAND KAVEH STEEL COMPLEX

Valve

Type	Ball valve	**Diameter Range**	DN 65- DN 200
Nominal Rating	DIN PN 16	**Symbol number**	D16BBA02

Pressure - Temperature Limits

																CERT. TYPE	NOTE REF.
Pressure (barg)	16																
Temperature (ºC)	80																

Especification

		CERT. TYPE	NOTE REF.
Service	Natural gas (GN)		
Description	Side entry, full bore, floating ball Replaceable seats Bi-directional sealing Two parts body valve Non renovable antistatic device Cavity pressure balancing hole with valve in open position Internal body ribs prevent ball form dropping in the en¡vent that seats are destroyed (example in a fire) ISO 5211 mounting flange		
General	Design shall comply with DIN 3357		
Face to face dimension	According to DIN 3202 F18 (EN 558 SERIE 27)		
End conections	Flanged according to DIN EN 1092-1		
Corrosion allowance	1 mm		

Materials

		CERT. TYPE	NOTE REF.
Body	ASTM A216 WCB	EN 10204	Note 6
Ball	A351 CF8M	EN 10204	Note 6
Seat ring	PTFE		Note 6
Gland packing	Graphite		Note 6
Stem	AISI A479 Gr316	EN 10204	Note 6
End connections	ASTM A216 WCB	EN 10204	Note 6
Antistatic device	STAINLESS STEEL	EN 10204	Note 6
Pressure testing	API 598		Note 1
Hydrostatic			Note 1
Leak test			Note 1

Actuators

									NOTE REF.
Maximum differential pressure	Max design pressure for all sizes and types of actuator								
MANUAL (ISV)	SIZES	FROM DN 50 TO DN 200		WRENCH	NODULAR IRON				Note 1
									Note 1
	Maximum pull 35 kg and 1000 revolutions								
ELECTRIC MOTOR (MOV)	POWER SUPPLY	400V / 50Hz / 3 phase			ENCLOSURE	IP65			
	AREA CLASSIFICATION	NON CLASSIFITED	CLASS		ZONE		GROUP	TEMP	
	LIMIT SWITCHES	OPEN	CLOSE	HANDWHEEL	YES		ACTUATION TIME		Note 1
	JUNCTION BOX								
NEUMATIC ACTUATOR (AOV)	SIMPLE EFECT	YES							
	FAIL ACTION	OPEN	CLOSE						
	AREA CLASSIFICATION	NON CLASSIFITED	CLASS		ZONE		GROUP	TEMP	
	LIMIT SWITCHES	OPEN	CLOSE	HANDWHEEL	YES		ACTUATION TIME		Note 1
	AIR PRESSURE	7 bar		REGULATION FILTER		MANOMETER			
	ELECTRONIC VALVE POWER SUPPLY		24Vcc						

NOTES

Note 1: To be filled by manufacturer

Note 2: Life of valve 30 years in cyclical service (24.000 cicles)

Nota 3: Noise at 1 meter is below of 85 Db

Nota 4: We need technical specification of painting

Note 5: Confirm which kind of seals will you supply for our valves

Note 6: Minimum Valve Material (the supplier may propose other material but only if the mechanical properties are better than the proposed).

Note 7:The supplier shall comply with the specified requirements of this data sheet. The valves impacted by potentially explosive atmospheres shall be

SARRALLE
Equipos Siderúrgicos

ARVAND KAVEH STEEL COMPLEX

Valve

Type	Check valve	Diameter Range	DN 40- DN 400
Nominal Rating	DIN PN 16	Symbol number	D16BCK02

Pressure - Temperature Limits

																	CERT. TYPE	NOTE REF.
Pressure (barg)	16																	
Temperature (ºC)	80																	

Especification

Service	Natural gas (GN)		
Description	Non Return Disc valve double plate Wafer PN 16 Metal/elastomer-seated Single-piece wafer-type body for long operating reliability and corrosion protection		
General	Design shall comply with EN 12334		
Face to face dimension	According to DIN 3202 K3		
End conections	DIN EN 1092-1 - Wafer type valve		
Corrosion allowance	1 mm		

Materials

Body	GGG50	EN 10204	Note 6
Disc	ASTM AISI 316	EN 10204	Note 6
Stem	AISI 420	EN 10204	Note 6
Gasket	NBR		
Pressure testing	API 598		Note 1
Hydrostatic			Note 1
Leak test			Note 1

Actuators

NOTES	
	Note 1: To be filled by manufacturer
	Note 2: Life of valve 30 years in cyclical service (24.000 cicles)
	Nota 3: Noise at 1 meter is below of 85 Db
	Nota 4: We need technical specification of painting
	Note 5: Confirm which kind of seals will you supply for our valves
	Note 6: Minimum Valve Material (the supplier may propose other material but only if the mechanical properties are better than the proposed).

SARRALLE Equipos Siderúrgicos	**ARVAND KAVEH STEEL COMPLEX**	

Valve

Type	Ball valve	**Diameter Range**	DN 15- DN 50
Nominal Rating	DIN PN 25	**Symbol number**	D25ABA01

Pressure - Temperature Limits

Pressure (barg)	16																
Temperature (ºC)	80															CERT. TYPE	NOTE REF.

Especification

Service	Argon (AR), Nitrogeno (NI), Direct cooling water (KW)		
Description	Side entry, full bore, floating solid ball Replaceable soft seats Bi-directional sealing Three pieces bolted construction. Anti blow out proof stem design Antistatic device		
General	Design shall comply with BS 5351		
Face to face dimension	According to DIN 3202-2		
End conections	Threaded according to DIN 2999		
Corrosion allowance	1 mm		

Materials

Body	ASTM A105	EN 10204	Note 6
Ball	SS AISI 316	EN 10204	Note 6
Seat seal	REINF. PTFE "S"		Note 6
Packing ring	GRAPHITE		Note 6
Stem	SS AISI 316	EN 10204	Note 6
End connections	ASTM A105	EN 10204	Note 6
Body seal	VITON		Note 6
Antistatic stem	SS AISI 316	EN 10204	Note 6
Pressure testing	API 598		Note 1
Hydrostatic			Note 1
Leak test			Note 1

Actuators

Maximum differential pressure	Max design pressure for all sizes and types of actuator												
MANUAL (ISV)	SIZES	UP TO DN 50	HANDLE	CARBON STEEL GALVANIZED WITH PLASTIC COVER									
	Maximum pull 35 kg and 1000 revolutions												
ELECTRIC MOTOR (MOV)	POWER SUPPLY	400V / 50Hz / 3 phase		ENCLOSURE	IP65								
	AREA CLASSIFICATION	NON CLASSIFITED	CLASS	ZONE	GROUP	TEMP							
	LIMIT SWITCHES	OPEN	CLOSE	HANDWHEEL	YES	ACTUATION TIME							Note 1
	JUNCTION BOX												
NEUMATIC ACTUATOR (AOV)	SIMPLE EFECT	YES											
	FAIL ACTION	OPEN	CLOSE										
	AREA CLASSIFICATION	NON CLASSIFITED	CLASS	ZONE	GROUP	TEMP							
	LIMIT SWITCHES	OPEN	CLOSE	HANDWHEEL	YES	ACTUATION TIME							Note 1
	AIR PRESSURE	7 bar	REGULATION FILTER	MANOMETER									
	ELECTRONIC VALVE POWER SUPPLY	24Vcc											

NOTES	Note 1: To be filled by manufacturer		
	Note 2: Life of valve 30 years in cyclical service (24.000 cicles)		
	Nota 3: Noise at 1 meter is below of 85 Db		
	Nota 4: We need technical specification of painting		
	Note 5: Confirm which kind of seals will you supply for our valves		
	Note 6: Minimum Valve Material (the supplier may propose other material but only if the mechanical properties are better than the proposed).	PAGE NUMBER	10

SARRALLE Equipos Siderúrgicos	**ARVAND KAVEH STEEL COMPLEX**	

Valve

Type	Ball valve	**Diameter Range**	DN 65- DN 200
Nominal Rating	DIN PN 25	**Symbol number**	D25ABA02

Pressure - Temperature Limits

																CERT. TYPE	NOTE REF.
Pressure (barg)	16																
Temperature (ºC)	80																

Especification

Service	Argon (AR), Nitrogeno (NI), Direct cooling water (KW)		
Description	Side entry, full bore, floating ball Replaceable seats Bi-directional sealing Two parts body valve Non renovable antistatic device Cavity pressure balancing hole with valve in open position Internal body ribs prevent ball form dropping in the en¡vent that seats are destroyed (example in a fire) ISO 5211 mounting flange		
General	Design shall comply with DIN 3357		
Face to face dimension	According to DIN 3202 F18 (EN 558 SERIE 27)		
End conections	Flanged according to DIN EN 1092-1		
Corrosion allowance	1 mm		

Materials

Body	ASTM A216 WCB	EN 10204	Note 6
Ball	A351 CF8M	EN 10204	Note 6
Seat ring	PTFE		Note 6
Gland packing	Graphite		Note 6
Stem	AISI A479 Gr316	EN 10204	Note 6
End connections	ASTM A216 WCB	EN 10204	Note 6
Antistatic device	STAINLESS STEEL	EN 10204	Note 6
Pressure testing	API 598		Note 1
Hydrostatic			Note 1
Leak test			Note 1

Actuators

Maximum differential pressure	Max design pressure for all sizes and types of actuator												
MANUAL (ISV)	SIZES	FROM DN 50 TO DN 200		WRENCH		NODULAR IRON							Note 1
													Note 1
	Maximum pull 35 kg and 1000 revolutions												
ELECTRIC MOTOR (MOV)	POWER SUPPLY	400V / 50Hz / 3 phase			ENCLOSURE	IP65							
	AREA CLASSIFICATION	NON CLASSIFITED	CLASS		ZONE		GROUP		TEMP				
	LIMIT SWITCHES	OPEN	CLOSE	HANDWHEEL	YES		ACTUATION TIME						Note 1
	JUNCTION BOX												
NEUMATIC ACTUATOR (AOV)	SIMPLE EFECT	YES											
	FAIL ACTION	OPEN	CLOSE										
	AREA CLASSIFICATION	NON CLASSIFITED	CLASS		ZONE		GROUP		TEMP				
	LIMIT SWITCHES	OPEN	CLOSE	HANDWHEEL	YES		ACTUATION TIME						Note 1
	AIR PRESSURE	7 bar		REGULATION FILTER		MANOMETER							
	ELECTRONIC VALVE POWER SUPPLY			24Vcc									

NOTES	Note 1: To be filled by manufacturer		
	Note 2: Life of valve 30 years in cyclical service (24.000 cicles)		
	Nota 3: Noise at 1 meter is below of 85 Db		
	Nota 4: We need technical specification of painting		
	Note 5: Confirm which kind of seals will you supply for our valves		
	Note 6: Minimum Valve Material (the supplier may propose other material but only if the mechanical properties are better than the proposed).	PAGE NUMBER	11

SARRALLE Equipos Siderúrgicos	**ARVAND KAVEH STEEL COMPLEX**	

Valve

Type	Ball valve	**Diameter Range**	DN 15- DN 50
Nominal Rating	DIN PN 40	**Symbol number**	S40ABA01

Pressure - Temperature Limits

Pressure (barg)	16																
Temperature (ºC)	80															CERT. TYPE	NOTE REF.

Especification

Service	Oxygen (OX)		
Description	Side entry, full bore, floating ball Replaceable seats Bi-directional sealing Fire safe Antistatic device		
General	Design shall comply with DIN 3357		
Face to face dimension	According to DIN 3202 F18		
End conections	Flanged according to DIN EN 1092-1		
Corrosion allowance	0 mm		

Materials

Body	A351 CF8M (1,4408)	EN 10204	Note 6
Ball	A351 CF8M		Note 6
Seat ring	PTFE		Note 6
Gland packing	Graphite (in fire safe construction)		Note 6
Stem	A479 Tp 316	EN 10204	Note 6
End connections	A351 CF8M (1,4408)	EN 10204	Note 6
Antistatic device	STAINLESS STEEL	EN 10204	Note 6
Pressure testing	API 598		Note 1
Hydrostatic			Note 1
Leak test			Note 1

Actuators

Maximum differential pressure	Max design pressure for all sizes and types of actuator												
MANUAL (ISV)	SIZES	UP TO 50		HANDWELL		NODULAR IRON							
	Maximum pull 35 kg and 1000 revolutions												
ELECTRIC MOTOR (MOV)	POWER SUPPLY	400V / 50Hz / 3 phase			ENCLOSURE	IP65							
	AREA CLASSIFICATION	NON CLASSIFITED	CLASS		ZONE		GROUP		TEMP				
	LIMIT SWITCHES	OPEN	CLOSE	HANDWHEEL	YES		ACTUATION TIME						Note 1
	JUNCTION BOX												
NEUMATIC ACTUATOR (AOV)	SIMPLE EFECT	YES											
	FAIL ACTION	OPEN	CLOSE										
	AREA CLASSIFICATION	NON CLASSIFITED	CLASS		ZONE		GROUP		TEMP				
	LIMIT SWITCHES	OPEN	CLOSE	HANDWHEEL	YES		ACTUATION TIME						Note 1
	AIR PRESSURE	7 bar		REGULATION FILTER		MANOMETER							
	ELECTRONIC VALVE POWER SUPPLY			24Vcc									

NOTES	Note 1: To be filled by manufacturer		
	Note 2: Life of valve 30 years in cyclical service (24.000 cicles)		
	Nota 3: Noise at 1 meter is below of 85 Db		
	Nota 4: We need technical specification of painting		
	Note 5: Confirm which kind of seals will you supply for our valves		
	Note 6: Minimum Valve Material (the supplier may propose other material but only if the mechanical properties are better than the proposed).	PAGE NUMBER	12

Sarralle Equipos Siderúrgicos

ARVAND KAVEH STEEL COMPLEX

Valve

Type	Ball valve	**Diameter Range**	DN 65- DN 150
Nominal Rating	DIN PN 40	**Symbol number**	S40ABA02

Pressure - Temperature Limits

		CERT. TYPE	NOTE REF.
Pressure (barg)	16		
Temperature (ºC)	80		

Especification

		CERT. TYPE	NOTE REF.
Service	Oxygen (OX)		
Description	Side entry, full bore, floating ball Replaceable seats Bi-directional sealing Fire safe Antistatic device		
General	Design shall comply with DIN 3357		
Face to face dimension	According to DIN 3202 F18		
End conections	Flanged according to DIN EN 1092-1		
Corrosion allowance	0 mm		

Materials

		CERT. TYPE	NOTE REF.
Body	A351 CF8M (1,4408)	EN 10204	Note 6
Ball	A351 CF8M		Note 6
Seat ring	PTFE		Note 6
Gland packing	Graphite (in fire safe construction)		Note 6
Stem	A479 Tp 316	EN 10204	Note 6
End connections	A351 CF8M (1,4408)	EN 10204	Note 6
Antistatic device	STAINLESS STEEL	EN 10204	Note 6
Pressure testing	API 598		Note 1
Hydrostatic			Note 1
Leak test			Note 1

Actuators

								NOTE REF.
Maximum differential pressure	Max design pressure for all sizes and types of actuator							
MANUAL (ISV)	SIZES	FROM DN 50 TO DN 150	WRENCH	NODULAR IRON				
	Maximum pull 35 kg and 1000 revolutions							
ELECTRIC MOTOR (MOV)	POWER SUPPLY	400V / 50Hz / 3 phase		ENCLOSURE	IP65			
	AREA CLASSIFICATION	NON CLASSIFITED	CLASS	ZONE	GROUP	TEMP		
	LIMIT SWITCHES	OPEN	CLOSE	HANDWHEEL	YES	ACTUATION TIME		Note 1
	JUNCTION BOX							
NEUMATIC ACTUATOR (AOV)	SIMPLE EFECT	YES						
	FAIL ACTION	OPEN	CLOSE					
	AREA CLASSIFICATION	NON CLASSIFITED	CLASS	ZONE	GROUP	TEMP		
	LIMIT SWITCHES	OPEN	CLOSE	HANDWHEEL	YES	ACTUATION TIME		Note 1
	AIR PRESSURE	7 bar	REGULATION FILTER	MANOMETER				
	ELECTRONIC VALVE POWER SUPPLY	24Vcc						

NOTES

Note 1: To be filled by manufacturer
Note 2: Life of valve 30 years in cyclical service (24.000 cicles)
Nota 3: Noise at 1 meter is below of 85 Db
Nota 4: We need technical specification of painting
Note 5: Confirm which kind of seals will you supply for our valves
Note 6: Minimum Valve Material (the supplier may propose other material but only if the mechanical properties are better than the proposed).

SARRALLE Equipos Siderúrgicos	**ARVAND KAVEH STEEL COMPLEX**	

Valve

Type	Ball valve	**Diameter Range**	DN 15- DN 50
Nominal Rating	DIN PN 16	**Symbol number**	G16ABA01

Pressure - Temperature Limits

																CERT. TYPE	NOTE REF.
Pressure (barg)	16																
Temperature (ºC)	80																

Especification

Service	Fire fighting water (FW), Potable water (PW), Compresed air (CA; UNDERGROUND), Service water (SW)		
Description	Side entry, full bore, floating solid ball Replaceable soft seats Bi-directional sealing Three pieces bolted construction. Anti blow out proof stem design Antistatic device		
General	Design shall comply with BS 5351		
Face to face dimension	According to DIN 3202-2		
End conections	Threaded according to DIN 2999		
Corrosion allowance	1 mm		

Materials

Body	ASTM A105	EN 10204	Note 6
Ball	SS AISI 316	EN 10204	Note 6
Seat seal	REINF. PTFE "S"		Note 6
Packing ring	GRAPHITE		Note 6
Stem	SS AISI 316	EN 10204	Note 6
End connections	ASTM A105	EN 10204	Note 6
Body seal	VITON		Note 6
Pressure testing	API 598		Note 1
Hydrostatic			Note 1
Leak test			Note 1

Actuators

Maximum differential pressure	Max design pressure for all sizes and types of actuator												
MANUAL (ISV)	SIZES	UP TO DN 50	HANDLE	CARBON STEEL GALVANIZED WITH PLASTIC COVER									
	Maximum pull 35 kg and 1000 revolutions												
ELECTRIC MOTOR (MOV)	POWER SUPPLY	400V / 50Hz / 3 phase		ENCLOSURE	IP65								
	AREA CLASSIFICATION	NON CLASSIFITED	CLASS	ZONE	GROUP	TEMP							
	LIMIT SWITCHES	OPEN	CLOSE	HANDWHEEL	YES	ACTUATION TIME							Note 1
	JUNCTION BOX												
NEUMATIC ACTUATOR (AOV)	SIMPLE EFECT	YES											
	FAIL ACTION	OPEN	CLOSE										
	AREA CLASSIFICATION	NON CLASSIFITED	CLASS	ZONE	GROUP	TEMP							
	LIMIT SWITCHES	OPEN	CLOSE	HANDWHEEL	YES	ACTUATION TIME							Note 1
	AIR PRESSURE	7 bar	REGULATION FILTER	MANOMETER									
	ELECTRONIC VALVE POWER SUPPLY	24Vcc											

NOTES	Note 1: To be filled by manufacturer		
	Note 2: Life of valve 30 years in cyclical service (24.000 cicles)		
	Nota 3: Noise at 1 meter is below of 85 Db		
	Nota 4: We need technical specification of painting		
	Note 5: Confirm which kind of seals will you supply for our valves		
	Note 6: Minimum Valve Material (the supplier may propose other material but only if the mechanical properties are better than the proposed).	PAGE NUMBER	14

SARRALLE Equipos Siderúrgicos	**ARVAND KAVEH STEEL COMPLEX**	

Valve

Type	Ball valve	**Diameter Range**	DN 65- DN 250
Nominal Rating	DIN PN 16	**Symbol number**	G16ABA02

Pressure - Temperature Limits

																CERT. TYPE	NOTE REF.
Pressure (barg)	16																
Temperature (ºC)	80																

Especification

Service	Fire fighting water (FW), Potable water (PW), Compresed air (CA; UNDERGROUND), Service water (SW)		
Description	Side entry, full bore, floating ball Replaceable seats Bi-directional sealing Two parts body valve ISO 5211 mounting flange		
General	Design shall comply with DIN 3357		
Face to face dimension	According to DIN 3202 F18 (EN 558 SERIE 27)		
End conections	Flanged according to DIN EN 1092-1		
Corrosion allowance	1 mm		

Materials

Body	EN-GJL-250 (Grey Cast Iron)	EN 10204	Note 6
Ball	AISI 410	EN 10204	Note 6
Seat seal	PTFE		Note 6
Packing ring	GRAPHITE		Note 6
Stem	AISI 303	EN 10204	Note 6
End connections	EN-GJL-250 (Grey Cast Iron)	EN 10204	Note 6
Pressure testing	DIN 3230 (BS 6755 PART 1)		Note 1
Hydrostatic			Note 1
Leak test			Note 1

Actuators

Maximum differential pressure	Max design pressure for all sizes and types of actuator												
MANUAL (ISV)	SIZES	FROM DN 50 TO DN 200		WRENCH	NODULAR IRON								
	Maximum pull 35 kg and 1000 revolutions												
ELECTRIC MOTOR (MOV)	POWER SUPPLY	400V / 50Hz / 3 phase			ENCLOSURE	IP65							
	AREA CLASSIFICATION	NON CLASSIFITED	CLASS		ZONE		GROUP		TEMP				
	LIMIT SWITCHES	OPEN	CLOSE	HANDWHEEL	YES		ACTUATION TIME						Note 1
	JUNCTION BOX												
NEUMATIC ACTUATOR (AOV)	SIMPLE EFECT	YES											
	FAIL ACTION	OPEN	CLOSE										
	AREA CLASSIFICATION	NON CLASSIFITED	CLASS		ZONE		GROUP		TEMP				
	LIMIT SWITCHES	OPEN	CLOSE	HANDWHEEL	YES		ACTUATION TIME						Note 1
	AIR PRESSURE	7 bar		REGULATION FILTER		MANOMETER							
	ELECTRONIC VALVE POWER SUPPLY			24Vcc									

NOTES	Note 1: To be filled by manufacturer		
	Note 2: Life of valve 30 years in cyclical service (24.000 cicles)		
	Nota 3: Noise at 1 meter is below of 85 Db		
	Nota 4: We need technical specification of painting		
	Note 5: Confirm which kind of seals will you supply for our valves		
	Note 6: Minimum Valve Material (the supplier may propose other material but only if the mechanical properties are better than the proposed).	PAGE NUMBER	15

SARRALLE Equipos Siderúrgicos	**ARVAND KAVEH STEEL COMPLEX**	

Valve

Type	Butterfly valve	**Diameter Range**	DN 65- DN 250
Nominal Rating	DIN PN 16	**Symbol number**	D16ABF01

Pressure - Temperature Limits

Pressure (barg)	16																
Temperature (ºC)	80															CERT. TYPE	NOTE REF.

Especification

Service	Fire fighting water (FW), Potable water (PW), Compresed air (CA; UNDERGROUND), Service water (SW)		
Description	Butterfly Wafer type valve One piece, bi-directional		
General	Design shall comply with DIN PN16		
Face to face dimension	According to EN 558 Serie 20 (DIN 3202 part 3, K1 serie)		
End conections	DIN EN 1092-1 - Wafer type valve		
Corrosion allowance	1 mm		

Materials

Body	NODULAR CAST IRON GGG 50	EN 10204	Note 6
Disk	A351 Gr CF8M	EN 10204	Note 6
Shaft	SS AISI 420	EN 10204	Note 6
Gasket/Rings	EPDM		Note 6
Seat	EPDM		Note 6
Pressure testing	API 598		Note 1
Hydrostatic			Note 1
Leak test			Note 1

Actuators

Maximum differential pressure	Max design pressure for all sizes and types of actuator												
MANUAL (ISV)	SIZES	UP TO DN 200	HAND DRIVE LEVER (9 POSITIONS)	CARBON STEEL/PLASTIC									Note 1
	SIZES	FROM DN 250 TO DN 400	GEAR OPERATED	SHELL OF GGG 50									Note 1
	Maximum pull 35 kg and 1000 revolutions												
ELECTRIC MOTOR (MOV)	POWER SUPPLY	400V / 50Hz / 3 phase		ENCLOSURE	IP65								
	AREA CLASSIFICATION	NON CLASSIFITED	CLASS		ZONE		GROUP		TEMP				
	LIMIT SWITCHES	OPEN	CLOSE	HANDWHEEL	YES		ACTUATION TIME						Note 1
	JUNCTION BOX												
NEUMATIC ACTUATOR (AOV)	SIMPLE EFECT	YES											
	FAIL ACTION	OPEN	CLOSE										
	AREA CLASSIFICATION	NON CLASSIFITED	CLASS		ZONE		GROUP		TEMP				
	LIMIT SWITCHES	OPEN	CLOSE	HANDWHEEL	YES		ACTUATION TIME						Note 1
	AIR PRESSURE	7 bar	REGULATION FILTER	MANOMETER									
	ELECTRONIC VALVE POWER SUPPLY	24Vcc											

NOTES	Note 1: To be filled by manufacturer		
	Note 2: Life of valve 30 years in cyclical service (24.000 cicles)		
	Nota 3: Noise at 1 meter is below of 85 Db		
	Nota 4: We need technical specification of painting		
	Note 5: Confirm which kind of seals will you supply for our valves		
	Note 6: Minimum Valve Material (the supplier may propose other material but only if the mechanical properties are better than the proposed).	PAGE NUMBER	16

SARRALLE Equipos Siderúrgicos	**ARVAND KAVEH STEEL COMPLEX**	

Valve			
Type	Check valve	**Diameter Range**	DN 65- DN 250
Nominal Rating	DIN PN 16	**Symbol number**	G16ACK02

Pressure - Temperature Limits																		
Pressure (barg)	16																CERT. TYPE	NOTE REF.
Temperature (ºC)	80																	

Especification			
Service	Fire fighting water (FW), Potable water (PW), Compresed air (CA; UNDERGROUND), Service water (SW)		
Description	Non Return Disc valve double plate Wafer PN 16 Metal/elastomer-seated Single-piece wafer-type body for long operating reliability and corrosion protection		
General	Design shall comply with EN 12334		
Face to face dimension	According to DIN 3202 K3		
End conections	DIN EN 1092-1 - Wafer type valve		
Corrosion allowance	1 mm		

Materials			
Body	GGG50	EN 10204	Note 6
Disc	ASTM AISI 316	EN 10204	Note 6
Stem	AISI 420	EN 10204	Note 6
Gasket	NBR		
Pressure testing	API 598		Note 1
Hydrostatic			Note 1
Leak test			Note 1
Leak test			Note 1

Actuators		

NOTES	
	Note 1: To be filled by manufacturer
	Note 2: Life of valve 30 years in cyclical service (24.000 cicles)
	Nota 3: Noise at 1 meter is below of 85 Db
	Nota 4: We need technical specification of painting
	Note 5: Confirm which kind of seals will you supply for our valves
	Note 6: Minimum Valve Material (the supplier may propose other material but only if the mechanical properties are better than the proposed).

SARRALLE Equipos Siderúrgicos	**ARVAND KAVEH STEEL COMPLEX**	

Valve

Type	Ball valve	**Diameter Range**	DN 15- DN 50
Nominal Rating	DIN PN 16	**Symbol number**	S16ABA01

Pressure - Temperature Limits

																CERT. TYPE	NOTE REF.
Pressure (barg)	16																
Temperature (ºC)	80																

Especification

Service	Raw water/Make up (IW), Demineralized water (DW), Instrument air (IA), Indirect close cooling water 35c (QW35), Indirect close cooling water 50c (QW50), Direct cooling water (KW)		
Description	Side entry, full bore, floating solid ball Replaceable soft seats Bi-directional sealing		
General	Design shall comply with BS 5351		
Face to face dimension	According to Manufacturer Standard		
End conections	Threaded according to DIN 2999		
Corrosion allowance	0 mm		

Materials

Body	SS 1,4408 (A316 CF8M)	EN 10204	Note 6
Ball	SS 1,4408 (A316 CF8M)	EN 10204	Note 6
Seat seal	PTFE		Note 6
Stem	SS AISI 316	EN 10204	Note 6
End connections	SS 1,4408 (A316 CF8M)	EN 10204	Note 6
Body seal	VITON		Note 6
Pressure testing	API 598		Note 1
Hydrostatic			Note 1
Leak test			Note 1

Actuators

Maximum differential pressure	Max design pressure for all sizes and types of actuator											
MANUAL (ISV)	SIZES	UP TO DN 50	HANDLE	CARBON STEEL GALVANIZED WITH PLASTIC COVER								
	Maximum pull 35 kg and 1000 revolutions											
ELECTRIC MOTOR (MOV)	POWER SUPPLY	400V / 50Hz / 3 phase		ENCLOSURE	IP65							
	AREA CLASSIFICATION	NON CLASSIFITED	CLASS		ZONE		GROUP		TEMP			
	LIMIT SWITCHES	OPEN	CLOSE	HANDWHEEL	YES		ACTUATION TIME					Note 1
	JUNCTION BOX											
NEUMATIC ACTUATOR (AOV)	SIMPLE EFECT	YES										
	FAIL ACTION	THIS INFORMATION APPEAR IN THE VALVE LIST										
	AREA CLASSIFICATION	NON CLASSIFITED	CLASS		ZONE		GROUP		TEMP			
	LIMIT SWITCHES	OPEN	CLOSE	HANDWHEEL	YES		ACTUATION TIME					Note 1
	AIR PRESSURE	7 bar	REGULATION FILTER		MANOMETER							
	ELECTRONIC VALVE POWER SUPPLY		24Vcc									
	BRACKETS		ACCORDING ISO 5211 IN STAINLESS STEEL									

NOTES	Note 1: To be filled by manufacturer		
	Note 2: Life of valve 30 years in cyclical service (24.000 cicles)		
	Nota 3: Noise at 1 meter is below of 85 Db		
	Nota 4: We need technical specification of painting		
	Note 5: Confirm which kind of seals will you supply for our valves		
	Note 6: Minimum Valve Material (the supplier may propose other material but only if the mechanical properties are better than the proposed).	PAGE NUMBER	18

SARRALLE
Equipos Siderúrgicos

ARVAND KAVEH STEEL COMPLEX

Valve

Type	Check valve	Diameter Range	DN 40- DN 100
Nominal Rating	DIN PN 16	Symbol number	D16HCK01

Pressure - Temperature Limits

																	CERT. TYPE	NOTE REF.
Pressure (barg)	16																	
Temperature (ºC)	80																	

Especification

Service	Hydraulic fluids return (HT), Hydraulic fluids drain (HD)		
Description	Non Return Disc valve Wafer PN 16 Metal/elastomer (Viton for hydraulic fluid)-seated Single-piece wafer-type body for long operating reliability and corrosion protection		
General	Design shall comply with BS 7438		
Face to face dimension	According to EN 558 part 2 serie 49		
End conections	DIN EN 1092-1, PN16 Wafer type valve		
Corrosion allowance	0.5 mm		

Materials

Body	Bronze	EN 10204	Note 6
Disc	Austenitic inox steel (1.4404/316L)	EN 10204	Note 6
Retaining spring	Austenitic inox steel (1.4404/316L)	EN 10204	Note 6
Spring	Austenitic inox steel (1.4401/316)	EN 10204	Note 6
Pressure testing	API 598		Note 1
Hydrostatic			Note 1
Leak test			Note 1

Actuators

NOTES	
	Note 1: To be filled by manufacturer
	Note 2: Life of valve 30 years in cyclical service (24.000 cicles)
	Nota 3: Noise at 1 meter is below of 85 Db
	Nota 4: We need technical specification of painting
	Note 5: Confirm which kind of seals will you supply for our valves
	Note 6: Minimum Valve Material (the supplier may propose other material but only if the mechanical properties are better than the proposed).

PIPING SPECIFICATION ANNEX 1

ARVAND KAVEH STEEL COMPLEX

HOT ROLLING MILL PLANT

SARTECH Engineering, S.L. - C.I.F. (ES) B20927521

Document Number:

ANNEX 1

Revision History

Rev	Revision Date	Created by	Checked by	Approved by	Description
00	09/01/2015	E.D.C.	J.G.	J.G.	Initial edition
01	16-03-2015	E.D.C.	J.G.	J.G.	Second edition
02	18-09-2015	D.B.	I.G.	J.G.	New revision

AENOR ER Empresa Registrada ER-0529/1999 · IQNet · Sartech ENGINEERING

INDEX

Content — Page

1. D16A ____ 3
2. D16B ____ 5
3. G16A ____ 7
4. S16A ____ 9
5. D16H ____ 11
6. L16A ____ 15
7. D250H ____ 13

SARTECH Engineering, S.L. - C.I.F. (ES) B20927521

SARTECH Engineering, S.L. - C.I.F. (ES) B20927521

1. D16A

AENOR ER Empresa Registrada ER-0529/1999 IQNet CERTIFIED MANAGEMENT SYSTEM

Sartech ENGINEERING

ARVAND KAVEH STEEL COMPLEX

Material:	Carbon Steel; P235GH / 1.0305 / A106	**Specification number:**	D16A
Design Limits:	Temperature: -10 ... +80 °C	**Design code:**	EN 13480
	Pressure: 16 bar (1.6 MPa)	**Pressure Rating:**	PN 16
	Corrosion allowance: 1.0 mm	**Diameter range:**	DN15-DN600
Type of fluid:	Non contact cooling water (CWS/CWR), Contact cooling water (KW), Emergency water (EW), Compresed air (CA)		

PIPING

DIMENSIONS/TYPE	DIN EN 10255 (DIN 2440) SEAMLESS- PE						DIN EN 10216-1 (DIN 2448) SEAMLESS - BE					DIN EN 10217-1 (DIN 2458) WELDED- BE									
MATERIAL	P235GH / 1.0305 / A106																				
Nominal Diameter	**DN 15**	**DN 20**	**DN 25**	***DN 32***	***DN 40***	***DN 50***	***DN 65***	***DN 80***	***DN 100***	**DN 125**	**DN 150**	**DN 200**	**DN 250**	**DN 300**	**DN 350**	***DN 400***	**(DN 450)**	***DN 500***	***DN 600***			
Outside Diameter	21.3	26.9	33.7	*42.4*	*48.3*	*60.3*	*76.1*	*88.9*	*114.3*	139.7	168.3	219.1	273.0	323.9	355.6	*406.4*	457.0	*508.0*	*610.0*			
Wall Thickness	2.65	2.65	3.25	*3.25*	*3.25*	*3.65*	*2.9*	*3.2*	3.6	4	4.5	4.5	5	5.6	5.6	6.3	6.3	6.3	6.3			
Weight (kg/m)	1.23	1.59	2.45	*3.10*	*3.64*	*5.19*	*5.28*	*6.81*	*9.90*	13.5	18.1	23.8	33	43.9	48.3	*62.4*	70.3	*78.2*	*93.8*			

FITTINGS

TYPE	SIZE	END	STANDARD/DIMENSIONS	MATERIAL	NOTE
Elbow / Bend 90º (3D SR; 5D LR)	DN 15-DN 50	SW	ASME B16.11, 3000#	A105	
	DN 65-DN600	BW	DIN EN 10253-1 (EX. Din 2605/2606-1)	P235GH / 1.0305 / A 106 (according to pipe)	
Elbow / Bend 45º (3D SR; 5D LR)	DN 15-DN 50	SW	ASME B16.11, 3000#	A105	
	DN 65-DN600	BW	DIN EN 10253-1 (EX. Din 2605/2606-1)	P235GH / 1.0305 / A 106 (according to pipe)	
Reducer, conc./ecc.	DN 15-DN 50	SW	ASME B16.11, 3000#	A105	
	DN 65-DN600	BW	DIN EN 10253-1 (EX. Din 2605/2606-1)	P235GH / 1.0305 / A 106 (according to pipe)	
T equal/reducing	DN 15-DN 50	SW	ASME B16.11, 3000#	A105	
	DN 65-DN600	BW	DIN EN 10253-1 (EX. Din 2605/2606-1)	P235GH / 1.0305 / A 106 (according to pipe)	
Cap	DN 15-DN 50	SW	ASME B16.11, 3000#	A105	
	DN 65-DN600	BW	DIN EN 10253-1 (EX. Din 2605/2606-1)	P235GH / 1.0305 / A 106 (according to pipe)	
Plug	DN 15-DN 50	BW	DIN EN 10242	EN-GJMW-400-5	Malleable cast iron fittings, (galvanised ISO 49)
Union (sockolet, weldolet, etc)	DN 15-DN 600	BW	DIN EN 10242 (ALTERN. B: ASME B16.11 3000#)	EN-GJMW-400-5 (ALTERN. B: A 105)	Malleable cast iron fittings, (galvanised ISO 49)

FLANGES, GASKETS AND BOLTING

TYPE	SIZE	END	STANDARD/DIMENSIONS	MATERIAL	NOTE
WN-Flange	DN 15-DN 600	BW	DIN EN 1092-1	S235JRG2 / 1.0432 / A 105	RAISED FACE TYPE (RF)
Slip-on Flange	DN 15-DN 600	BW	DIN EN 1092-1	S235JRG2 / 1.0432 / A 105	FLAT FACE TYPE (RF)
Sockolet-Flange	DN 15-DN 50	SW	150# ASME B16.5 BORE TO MATCH PIPE	S235JRG2 / 1.0432 / A 105	RAISED FACE TYPE B1 (RF)
Blind Flange	DN 15-DN 600	-	DIN EN 1092-1	S235JRG2 / 1.0432 / A 105	RAISED FACE TYPE B1 (RF)
Gasket	DN 15-DN 50		ASME B16.20	Compression fibre with bonding agent. Flat Gasket, 2mm thick. (e.g. KlingerSil C-4400)	
	DN 15-DN 600	-	DIN EN 1514-1		
Screw	DN 15-DN 600	-	DIN EN ISO 4014/4017	8.8 galvanised	Hexagon head screw (ex DIN 931/933)
Hex. socket screw	DN 15-DN 600	-	DIN EN ISO 4762	8.8 galvanised	Hexagon socket head screw (ex DIN 912)
Stud Bolt	DN 15-DN 600	-	DIN EN ISO 4753	8.8 galvanised	Stud bolt with metric thread (DIN 976-1, type B)
Nut	DN 15-DN 600	-	DIN EN ISO 4032	8.8 galvanised	Hexagon nut (ex DIN 934)
Flat washer	DN 15-DN 600	-	DIN EN ISO 7089	8.8 galvanised	

PIPE NIPPLES

TYPE	SIZE	TYPE OF CONNECTION	DESCRIPTION	NOTE
Drains and Vents	DN 20	PIPE TO PIPE	Pipe Nipple TOE L=100mm	
Pressure measurement	DN 15	PIPE TO PIPE	Sockolet, Pipe Nipple L=150mm THD (DIN 2999/PE), Ball valve THD (DIN 2999)	
Temperature measurement	DN 25	THD (Thredolet)	Threadolet THD (to be used depending on installation	

EXTRA

TYPE	SIZE	STANDARD/DIMENSIONS	MATERIAL	NOTE
Pipe fastening	DN 15-DN 25	DIN 3015-2	PP (AL in hot areas)	Pipe clamps (Stauff) heavy duty + single weld plate
	DN 15-DN 500	DIN 3570	Steel, galvanised	Round steel U-bolt clamps TYPE A
Flex. Hoses	DN 20-DN 32	According to HOSE DATA SHEETS (type of conections, material, length)		Refer to separate document

VALVES

TYPE	ENDS	SIZE	MATERIAL	VALVE SPECIFICATION TAG
BALL VALVE	THREADED; THD (DIN 259/2999, GAS)	DN 15-DN 50	CS to ASTM A105 + PTFE	D16ABA01
	FLANGED (ACCORDING TO SPECIFICATION)	DN 65-DN 600	EN-GJL-250 (Grey Cast Iron) + AISI 410	D16ABA02
GLOBE VALVE	THREDOLET or FLANGED	DN 15-DN 50	CS to ASTM A105 + PTFE	D16AGL01
		DN 65-DN 250	GG25	D16AGL02
BUTTERFLY VALVE	FLANGED (ACCORDING TO SPECIFICATION)	DN 65-DN 600	CS to GP240GH (A216WCB)	D16ABF01
CHECK VALVE	FLANGED (ACCORDING TO SPECIFICATION)	DN 40-DN 400	GGG50	D16ACK02
3WAY BALL VALVE	FLANGED (ACCORDING TO SPECIFICATION)	DN 25-DN 200	ASTM A216 CLB + A351 GR CF8M	D16ABA3

BRANCH CONSTRUCTION

First option:

BRANCH \ HEADER	15	20	25	32	40	50	65	80	100	125	150	200	250	300	350	400	450	500	600
15	T	S	S	S	S	S	S	S	S	S	S	S	S	S	S	S	S	S	S
20		T	RT	S	RT	S	S	S	S	S	S	S	S	S	S	S	S	S	S
25			T	RT	RT	S	S	S	S	S	S	S	S	S	S	S	S	S	S
32				T	RT	RT	RT	S	S	S	S	S	S	S	S	S	S	S	S
40					T	RT	RT	RT	S	S	S	S	S	S	S	S	S	S	S
50						T	RT	RT	RT	RT	RT	P	P	P	P	P	P	P	P
65							T	RT	RT	RT	RT	P	P	P	P	P	P	P	P
80								T	RT	RT	RT	P	P	P	P	P	P	P	P
100									T	RT	RT	P	P	P	P	P	P	P	P
125										T	RT	RT	RT	P	P	P	P	P	P
150											T	RT	RT	RT	P	P	P	P	P
200												T	RT	RT	RT	P	P	P	P
250													T	RT	RT	RT	P	P	P
300														T	RT	RT	P	P	P
350															T	RT	P	P	P
400																T	P	P	P
450																	P	P	P
500																		P	P
600																			P

Second Option: DIN elements + ASME olets (sockolets, weldolets, etc)

P	PIPE TO PIPE	T	EQUAL T	RT	REDUCING T	W	WELDOLET	S	SOCKOLET

NOTES

Note 1: All the components of these especification shall be according to customer properties

Note 2: The valve materials could be different depending on the supplier, but the minimum quality of these materials are at least the indicated in these specification.

SARTECH Engineering, S.L. - C.I.F. (ES) B20927521

2. D16B

Sartech ENGINEERING

ARVAND KAVEH STEEL COMPLEX

Material:	Carbon Steel; P235GH / 1.0305 / A106	**Specification number:**	D16B
Design Limits:	Temperature: -10 ... +80 °C	**Design code:**	EN 13480
	Pressure: 16 bar (1.6 MPa)	**Pressure Rating:**	PN 16
	Corrosion allowance: 1.0 mm	**Diameter range:**	DN15-DN500
Type of fluid:	Natural gas (NG)		

PIPING

DIMENSIONS/TYPE	DIN EN 10255 (DIN 2440) SEAMLESS - PE						DIN EN 10255 (DIN 2441) SEAMLESS - BE					DIN EN 10216-1 (DIN 2448) SEAMLESS - BE						
MATERIAL	P235GH / 1.0305 / A106																	
Nominal Diameter	**DN 15**	**DN 20**	**DN 25**	***DN 32***	***DN 40***	***DN 50***	***DN 65***	***DN 80***	***DN 100***	**DN 125**	**DN 150**	***DN 200***	**DN 250**	**DN 300**	**DN 350**	***DN 400***	**(DN 450)**	***DN 500***
Outside Diameter	21.3	26.9	33.7	*42.4*	*48.3*	*60.3*	*76.1*	*88.9*	*114.3*	139.7	168.3	*219.1*	273.0	323.9	355.6	*406.4*	457.0	*508.0*
Wall Thickness	2.65	2.65	3.25	*3.25*	*3.25*	*3.65*	*4.5*	*4.85*	5	5.4	5.4	5.9	6.3	7.1	8	8.8	10	11
Weight (kg/m)	1.23	1.59	2.45	*3.10*	*3.64*	*5.19*	*7.9*	*10.1*	*14.4*	17.8	21.2	*23.8*	33	43.9	48.3	*62.4*	70.3	*78.2*

FITTINGS

TYPE	SIZE	END	STANDARD/DIMENSIONS	MATERIAL	NOTE
Elbow / Bend 90º (3D SR; 5D LR)	DN 15-DN 50	SW	ASME B16.11, 3000#	A105	
	DN 65-DN500	BW	DIN EN 10253-1 (EX. Din 2605/2606-1)	P235GH / 1.0305 / A 106 (according to pipe)	
Elbow / Bend 45º (3D SR; 5D LR)	DN 15-DN 50	SW	ASME B16.11, 3000#	A105	
	DN 65-DN500	BW	DIN EN 10253-1 (EX. Din 2605/2606-1)	P235GH / 1.0305 / A 106 (according to pipe)	
Reducer, conc./ecc.	DN 15-DN 50	SW	ASME B16.11, 3000#	A105	
	DN 65-DN500	BW	DIN EN 10253-1 (EX. Din 2605/2606-1)	P235GH / 1.0305 / A 106 (according to pipe)	
T equal/reducing	DN 15-DN 50	SW	ASME B16.11, 3000#	A105	
	DN 65-DN500	BW	DIN EN 10253-1 (EX. Din 2605/2606-1)	P235GH / 1.0305 / A 106 (according to pipe)	
Cap	DN 15-DN 50	SW	ASME B16.11, 3000#	A105	
	DN 65-DN500	BW	DIN EN 10253-1 (EX. Din 2605/2606-1)	P235GH / 1.0305 / A 106 (according to pipe)	
Cap	DN 15-DN 500	BW	DIN EN 10253-1 (EX. DIN 2617)	P235TR1 / 1.0254	
Plug	DN 15-DN 500	BW	DIN EN 10242	EN-GJMW-400-5	Malleable cast iron fittings, (galvanised ISO 49)
Union (sockolet, weldolet, etc)	DN 15-DN 500	BW	DIN EN 10242 (ALTERN. B: ASME B16.11 3000#)	EN-GJMW-400-5 (ALTERN. B: A 105)	Malleable cast iron fittings, (galvanised ISO 49)

FLANGES, GASKETS AND BOLTING

TYPE	SIZE	END	STANDARD/DIMENSIONS	MATERIAL	NOTE
WN-Flange	DN 15-DN 600	BW	DIN EN 1092-1	S235JRG2 / 1.0432 / A 105	RAISED FACE TYPE (RF)
Slip-on Flange	DN 15-DN 600	BW	DIN EN 1092-1	S235JRG2 / 1.0432 / A 105	FLAT FACE TYPE (RF)
Sockolet-Flange	DN 15-DN 50	SW	150# ASME B16.5 BORE TO MATCH PIPE	S235JRG2 / 1.0432 / A 105	RAISED FACE TYPE B1 (RF)
Blind Flange	DN 15-DN 600	-	DIN EN 1092-1	S235JRG2 / 1.0432 / A 105	RAISED FACE TYPE B1 (RF)
Gasket	DN 15-DN 50		ASME B16.20	Compression fibre with bonding agent. Flat Gasket, 2mm thick. (e.g. KlingerSil C-4400)	
	DN 15-DN 600	-	DIN EN 1514-1		
Screw	DN 15-DN 500	-	DIN EN ISO 4014/4017	8.8 galvanised	Hexagon head screw (ex DIN 931/933)
Hex. socket screw	DN 15-DN 500	-	DIN EN ISO 4762	8.8 galvanised	Hexagon socket head screw (ex DIN 912)
Stud Bolt	DN 15-DN 500	-	DIN EN ISO 4753	8.8 galvanised	Stud bolt with metric thread (DIN 976-1, type B)
Nut	DN 15-DN 500	-	DIN EN ISO 4032	8.8 galvanised	Hexagon nut (ex DIN 934)
Flat washer	DN 15-DN 600	-	DIN EN ISO 7089	8.8 galvanised	

PIPE NIPPLES

TYPE	SIZE	TYPE OF CONNECTION	DESCRIPTION	NOTE
Drains and Vents	DN 20	PIPE TO PIPE	Pipe Nipple TOE L=100mm	
Pressure measurement	DN 15	PIPE TO PIPE	Sockolet, Pipe Nipple L=150mm THD (DIN 2999/PE), Ball valve THD (DIN 2999)	
Temperature measurement	DN 25	THD (Thredolet)	Threadolet THD (to be used depending on installation	

EXTRA

TYPE	SIZE	STANDARD/DIMENSIONS	MATERIAL	NOTE
Pipe fastening	DN 15-DN 25	DIN 3015-2	PP (AL in hot areas)	Pipe clamps (Stauff) heavy duty + single weld plate
	DN 15-DN 500	DIN 3570	Steel, galvanised	Round steel U-bolt clamps TYPE A
Flex. Hoses	DN 20-DN 32	According to HOSE DATA SHEETS (type of conections, material, length)		Refer to separate document

VALVES

TYPE	ENDS	SIZE	MATERIAL	NOTE
BALL VALVE	THREADED; THD (DIN 259/2999, GAS)	DN 15-DN 50	CS to ASTM A105 + PTFE	D16BBA01
	FLANGED (ACCORDING TO SPECIFICATION)	DN 65-DN 600	CS to ASTM A216 Gr. WCB	D16BBA02
CHECK VALVE	FLANGED (ACCORDING TO SPECIFICATION)	DN 40-DN 400	GGG50	D16BCK02

BRANCH CONSTRUCTION

First option:

HEADER	15	20	25	32	40	50	65	80	100	125	150	200	250	300	350	400	450	500	
15	T	S	S	S	S	S	S	S	S	S	S	S	S	S	S	S	S	S	15
20		T	RT	S	RT	S	S	S	S	S	S	S	S	S	S	S	S	S	20
25			T	RT	RT	S	S	S	S	S	S	S	S	S	S	S	S	S	25
32				T	RT	RT	RT	S	S	S	S	S	S	S	S	S	S	S	32
40					T	RT	RT	RT	S	S	S	S	S	S	S	S	S	S	40
50						T	RT	RT	RT	RT	RT	P	P	P	P	P	P	P	50
65							T	RT	RT	RT	RT	P	P	P	P	P	P	P	65
80								T	RT	RT	RT	P	P	P	P	P	P	P	80
100									T	RT	RT	P	P	P	P	P	P	P	100
125										T	RT	RT	RT	P	P	P	P	P	125
150											T	RT	RT	RT	P	P	P	P	150
200												T	RT	RT	RT	P	P	P	200
250													T	RT	RT	RT	P	P	250
300														T	RT	RT	P	P	300
350															T	RT	P	P	350
400																T	P	P	400
450																	P	P	450
500																		P	500
																			600

BRANCH

P	PIPE TO PIPE	T	EQUAL T	RT	REDUCING T	W	WELDOLET	S	SOCKOLET

NOTES

Note 1: All the components of these especification shall be according to customer properties

Note 2: The valve materials could be different depending on the supplier, but the minimum quality of these materials are at least the indicated in these specification.

SARTECH Engineering, S.L. - C.I.F. (ES) B20927521

3. G16A

ARVAND KAVEH STEEL COMPLEX

Material:	Carbon Steel; P235GH / 1.0305 / A106 (HOP DIG GALVANIZED)	**Specification number:**	G16A
Design Limits:	Temperature: -10 ... +80 °C	**Design code:**	EN 13480
	Pressure: 16 bar (1.6 MPa)	**Pressure Rating:**	PN 16
	Corrosion allowance: 0.75 mm	**Diameter range:**	DN15-DN250
Type of fluid:	Instrument Air (IA)		

PIPING

DIMENSIONS/TYPE	DIN EN 10255 (DIN 2440)/ SEAMLESS PIPES -PE								DIN EN 10216-1 (DIN 2448)/SEAMLESS PIPES - BE			
MATERIAL	P235TR1 / 1.0254 / A106 (HOP DIG GALVANIZED)											
Nominal Diameter	**DN 15**	**DN 20**	**DN 25**	***DN 32***	***DN 40***	***DN 50***	***DN 65***	***DN 80***	***DN 100***	***DN 125***	**DN 150**	**DN 200**	**DN 250**
Outside Diameter	21.3	26.9	33.7	*42.4*	*48.3*	*60.3*	*76.1*	*88.9*	*114.3*	*139.7*	168.3	219.1	273.0
Wall Thickness	2.65	2.65	3.25	*3.25*	*3.25*	*3.65*	*2.9*	*3.2*	*3.6*	*4*	4.5	5.4	6.3
Weight (kg/m)	1.23	1.59	2.45	*3.10*	*3.64*	*5.19*	*5.28*	*6.81*	*9.90*	*13.5*	18.1	25	33,2

FITTINGS

TYPE	SIZE	END	STANDARD/DIMENSIONS	MATERIAL	NOTE
Elbow / Bend 90º (3D SR; 5D LR)	DN 15-DN 100	THD(ASME 1.20.1)	ASME B16.11, 3000#	A105 (HOP DIP GALVANIZED)	
	DN 100-DN250	BW	DIN EN 10253-1 (EX. Din 2605/2606-1)	P235GH / 1.0305 / A106 (according to pipe, HOP DIG GALVANIZED)	
Elbow / Bend 45º (3D SR; 5D LR)	DN 15-DN 100	THD(ASME 1.20.1)	ASME B16.11, 3000#	A105 (HOP DIP GALVANIZED)	
	DN 100-DN250	BW	DIN EN 10253-1 (EX. Din 2605/2606-1)	P235GH / 1.0305 / A106 (according to pipe, HOP DIG GALVANIZED)	
Reducer, conc./ecc.	DN 15-DN 100	THD(ASME 1.20.1)	ASME B16.11, 3000#	A105 (HOP DIP GALVANIZED)	
	DN 100-DN250	BW	DIN EN 10253-1 (EX. Din 2605/2606-1)	P235GH / 1.0305 / A106 (according to pipe, HOP DIG GALVANIZED)	
T equal/reducing	DN 15-DN 100	THD(ASME 1.20.1)	ASME B16.11, 3000#	A105 (HOP DIP GALVANIZED)	
	DN 100-DN250	BW	DIN EN 10253-1 (EX. Din 2605/2606-1)	P235GH / 1.0305 / A106 (according to pipe, HOP DIG GALVANIZED)	
Cap	DN 15-DN 100	THD(ASME 1.20.1)	ASME B16.11, 3000#	A105 (HOP DIP GALVANIZED)	
	DN 100-DN250	BW	DIN EN 10253-1 (EX. Din 2605/2606-1)	P235GH / 1.0305 / A106 (according to pipe, HOP DIG GALVANIZED)	
Plug	DN 15-DN 100	THD(ASME 1.20.1)	ASME B16.11, 3000#	A105 (HOP DIP GALVANIZED)	Malleable cast iron fittings, (galvanised ISO 49)
Union	DN 15-DN 100	THD(ASME 1.20.1)	ASME B16.11, 3000#	A105 (HOP DIP GALVANIZED)	Malleable cast iron fittings, (galvanised ISO 49)

FLANGES, GASKETS AND BOLTING

TYPE	SIZE	END	STANDARD/DIMENSIONS	MATERIAL	NOTE
WN-Flange	DN 15-DN 100	THD (ASME 1.20.1)	CL 150# ASME B 16.5	S235JRG2 / 1.0432 / A 105 (HOP DIG GALVANIZED)	RAISED FACE TYPE B1 (RF)
	DN 125-DN250	BW	DIN EN 1092-1	S235JRG2 / 1.0432 / A 105 (HOP DIG GALVANIZED)	
Slip-on Flange	DN 15-DN 100	THD (ASME 1.20.1)	CL 150# ASME B 16.5	S235JRG2 / 1.0432 / A 105 (HOP DIG GALVANIZED)	FLAT FACE TYPE (RF)
	DN 125-DN250	BW	DIN EN 1092-1	S235JRG2 / 1.0432 / A 105 (HOP DIG GALVANIZED)	FLAT FACE TYPE (RF)
Blind Flange	DN 15-DN 100	THD (ASME 1.20.1)	CL 150# ASME B 16.5	S235JRG2 / 1.0432 / A 105 (HOP DIG GALVANIZED)	RAISED FACE TYPE B1 (RF)
	DN 125-DN250	BW	DIN EN 1092-1	S235JRG2 / 1.0432 / A 105 (HOP DIG GALVANIZED)	
Gasket	DN 15-DN 50		ASME B16.20	Compression fibre with bonding agent. Flat Gasket, 2mm thick. (e.g. KlingerSil C-4400)	
	DN 15-DN 600	-	DIN EN 1514-1		
Screw	DN 15-DN 250		DIN EN ISO 4014/4017	8.8 galvanised	Hexagon head screw (ex DIN 931/933)
Hex. socket screw	DN 15-DN 250		DIN EN ISO 4762	8.8 galvanised	Hexagon socket head screw (ex DIN 912)
Stud Bolt	DN 15-DN 250		DIN EN ISO 4753	8.8 galvanised	Stud bolt with metric thread (DIN 976-1, type B)
Nut	DN 15-DN 250		DIN EN ISO 4032	8.8 galvanised	Hexagon nut (ex DIN 934)
Flat washer	DN 15-DN 600	-	DIN EN ISO 7089	8.8 galvanised	

PIPE NIPPLES

TYPE	SIZE	TYPE OF CONNECTION	DESCRIPTION	NOTE
Drains and Vents	DN 20	PIPE TO PIPE	Pipe Nipple TOE L=100mm	
Pressure measurement	DN 15	PIPE TO PIPE	Sockolet, Pipe Nipple L=150mm THD (DIN 2999/PE), Ball valve THD (DIN 2999)	
Temperature measurement	DN 25	THD (Thredolet)	Threadolet THD (to be used depending on installation	

EXTRA

TYPE	SIZE	STANDARD/DIMENSIONS	MATERIAL	NOTE
Pipe fastening	DN 15-DN 25	DIN 3015-2	PP (AL in hot areas)	Pipe clamps (Stauff) heavy duty + single weld plate
	DN 15-DN 500	DIN 3570	Steel, galvanised	Round steel U-bolt clamps TYPE A
Flex. Hoses	DN 20-DN 32	According to HOSE DATA SHEETS (type of conections, material, length)		Refer to separate document

VALVES

TYPE	ENDS	SIZE	MATERIAL	NOTE
BALL VALVE	THREADED; THD (DIN 259/2999, GAS)	DN 15-DN 50	CS to ASTM A105 (HOP DIG GALVANIZED) + PTFE	G16ABA01
	FLANGED (ACCORDING TO SPECIFICATION)	DN 65-DN 250	CS to ASTM A216 Gr. WCB (HOP DIG GALVANIZED)	G16ABA02
GATE VALVE	FLANGED (ACCORDING TO SPECIFICATION)	DN 65-DN 250	CS to ASTM A216 Gr. WCB (HOP DIG GALVANIZED)	G16AGA02
GLOBE VALVE	THREADED; THD (DIN 259/2999, GAS)	DN 15-DN 50	CS to ASTM A105 (HOP DIG GALVANIZED) + PTFE	G16AGL01
	FLANGED (ACCORDING TO SPECIFICATION)	DN 65-DN 250	GG25 (HOP DIG GALVANIZED)	G16AGL02
BUTTERFLY VALVE	FLANGED (ACCORDING TO SPECIFICATION)	DN 65-DN 250	CS to GP240GH (A216WCB) (HOP DIG GALVANIZED)	G16ABF01
CHECK VALVE	FLANGED (ACCORDING TO SPECIFICATION)	DN 65-DN 250	GGG50 (HOP DIG GALVANIZED)	G16ACK02

BRANCH CONSTRUCTION

First option: DIN Elements

HEADER														
15	20	25	32	40	50	65	80	100	125	150	200	250		
T	RT	RT	RT	RT	RT	P	P	P	P	P	P	P	15	BRANCH
	T	RT	RT	RT	RT	P	P	P	P	P	P	P	20	
		T	RT	RT	RT	P	P	P	P	P	P	P	25	
			T	RT	RT	RT	P	P	P	P	P	P	32	
				T	RT	RT	RT	P	P	P	P	P	40	
					T	RT	RT	RT	P	P	P	P	50	
						T	RT	RT	RT	P	P	P	65	
							T	RT	RT	RT	P	P	80	
								T	RT	RT	RT	P	100	
									T	RT	RT	RT	125	
										T	RT	RT	150	
											T	RT	200	
												T	250	

P	PIPE TO PIPE	T	EQUAL T	RT	EQUAL T WITH REDUCER	W	WELDOLET	S	SOCKOLET

NOTES

Note 1: All the components of these especification shall be according to customer properties

Note 2: The valve materials could be different depending on the supplier, but the minimum quality of these materials are at least the indicated in these specification.

SARTECH Engineering, S.L. - C.I.F. (ES) B20927521

4. S16A

ARVAND KAVEH STEEL COMPLEX

Material:	Stainless Steel; X2CrNi18-9/1.4307 (ASTM 304L)	**Specification number:**	S16A
Design Limits:	Temperature: -10 ... +80 °C	**Design code:**	EN 13480
	Pressure: 16 bar (1.6 MPa)	**Pressure Rating:**	PN 16
	Corrosion allowance: 0.0 mm	**Diameter range:**	DN6-DN200
Type of fluid:	Oxygen (OX)		

PIPING

DIMENSIONS/TYPE	ISO 1127 / DIN EN 10216-5 / SEAMLESS PIPES- PE						ISO 1127 / DIN EN 10217-7)/WELDED PIPES - BE														
MATERIAL	X2CrNi18-9/1.4307 (ASTM 304L)																				
Nominal Diameter	**DN 6**	**DN 8**	**DN 10**	**DN 15**	**DN 20**	**DN 25**	***DN 32***	***DN 40***	***DN 50***	***DN 65***	***DN 80***	***DN 100***	**DN 125**	**DN 150**	**DN 200**							
Outside Diameter	10.2	13.5	17.2	21.3	26.9	33.7	*42.4*	*48.3*	*60.3*	*76.1*	*88.9*	*114.3*	139.7	*168.3*	219.1							
Wall Thickness	2	2.3	2.3	2.6	2.6	3.2	*3.2*	*3.2*	*3.6*	*3.2*	*3.2*	*3.2*	*3.2*	*3.2*	3.6							
Weight (kg/m)	0.4	0.64	0.86	1.23	1.59	2.45	*3.10*	*3.64*	*5.19*	*5.28*	*6.81*	*9.90*	13.5	18.1	18.1							

FITTINGS

TYPE	SIZE	END	STANDARD/DIMENSIONS	MATERIAL	NOTE
Elbow / Bend 90º (3D SR; 5D LR)	DN 15-DN 50	SW	ASME B 16.11 3000#	ASTM 304L	
	DN 15-DN 200	BW	DIN EN 10253-3 (EX. Din 2605/2606-1)	X2CrNi18-9/1.4307	
Elbow / Bend 45º (3D SR; 5D LR)	DN 15-DN 50	SW	ASME B 16.11 3000#	ASTM 304L	
	DN 15-DN 200	BW	DIN EN 10253-3 (EX. Din 2605/2606-1)	X2CrNi18-9/1.4307	
Reducer, conc./ecc.	DN 15-DN 50	SW	ASME B 16.11 3000#	ASTM 304L	
	DN 15-DN 200	BW	DIN EN 10253-3 (EX. Din 2616)	X2CrNi18-9/1.4307	
T equal/reducing	DN 15-DN 50	SW	ASME B 16.11 3000#	ASTM 304L	
	DN 15-DN 200	BW	DIN EN 10253-3 (EX. DIN 2615)	X2CrNi18-9/1.4307	
Cap	DN 15-DN 50	SW	ASME B 16.11 3000#	ASTM 304L	
	DN 15-DN 200	BW	DIN EN 10253-1 (EX. DIN 2617)	X2CrNi18-9/1.4307	
Plug	DN 15-DN 50	BW	DIN EN 10242	X2CrNi18-9/1.4307	
Union (sockolet, weldolet, etc)	DN 15-DN 200	BW	DIN EN 10242 (ALTERN. B: ASME B16.11 3000#)	X2CrNi18-9/1.4307	

FLANGES, GASKETS AND BOLTING

TYPE	SIZE	END	STANDARD/DIMENSIONS	MATERIAL	NOTE
WN-Flange	DN 15-DN 200	BW	DIN EN 1092-1	X2CrNi18-9/1.4307/ASTM 304L	RAISED FACE TYPE B1 (RF)
Slip-on Flange	DN 15-DN 200	BW	DIN EN 1092-1	X2CrNi18-9/1.4307/ASTM 304L	FLAT FACE TYPE (RF)
Sockolet-Flange	DN 15-DN 50	SW	150# ASME B16.5 BORE TO MATCH PIPE	X2CrNi18-9/1.4307/ASTM 304L	RAISED FACE TYPE B1 (RF)
Blind Flange	DN 15-DN 200	BW	DIN EN 1092-1	X2CrNi18-9/1.4307	TYPE A
Gasket	DN 15-DN 200	-	DIN EN 1514-1	Compression fibre with bonding agent. Flat Gasket, 2mm thick. (e.g. KlingerSil C-4400)	
Screw	DN 15-DN 200	-	DIN EN ISO 4014/4017	8.8 Inox Steel	Hexagon head screw (ex DIN 931/933)
Hex. socket screw	DN 15-DN 200	-	DIN EN ISO 4762	8.8 Inox Steel	Hexagon socket head screw (ex DIN 912)
Stud Bolt	DN 15-DN 200	-	DIN EN ISO 4753	8.8 Inox Steel	Stud bolt with metric thread (DIN 976-1, type B)
Nut	DN 15-DN 200	-	DIN EN ISO 4032	8.8 Inox Steel	Hexagon nut (ex DIN 934)

PIPE NIPPLES

TYPE	SIZE	TYPE OF CONNECTION	DESCRIPTION	NOTE
Drains and Vents	DN 20	PIPE TO PIPE	Pipe Nipple TOE L=100mm	
Pressure measurement	DN 15	PIPE TO PIPE	Sockolet, Pipe Nipple L=150mm THD (DIN 2999/PE), Ball valve THD (DIN 2999)	
Temperature measurement	DN 25	THD (Thredolet)	Threadolet THD (to be used depending on installation	

EXTRA

TYPE	SIZE	STANDARD/DIMENSIONS	MATERIAL	NOTE
Pipe fastening	DN 15-DN 25	DIN 3015-2	PP (AL in hot areas)	Pipe clamps (Stauff) heavy duty + single weld plate
	DN 15-DN 500	DIN 3570	Steel, galvanised	Round steel U-bolt clamps TYPE A
Flex. Hoses	DN 20-DN 32	According to HOSE DATA SHEETS (type of conections, material, length)		Refer to separate document

VALVES

TYPE	ENDS	SIZE	MATERIAL	NOTE
BALL VALVE	THREADED; THD (DIN 259/2999, GAS)	DN 15-DN 50	Stainless Steel 1.4408 (A316 CF8M)	S16ABA01

BRANCH CONSTRUCTION

First option: DIN Elements

HEADER												
15	20	25	32	40	50	65	80	100	125	150	200	BRANCH
T	S	S	S	S	S	S	S	S	S	S	S	15
	T	RT	S	RT	S	S	S	S	S	S	S	20
		T	RT	RT	S	S	S	S	S	S	S	25
			T	RT	RT	RT	S	S	S	S	S	32
				T	RT	RT	RT	S	S	S	S	40
					T	RT	RT	RT	RT	RT	P	50
						T	RT	RT	RT	RT	P	65
							T	RT	RT	RT	P	80
								T	RT	RT	P	100
									T	RT	RT	125
										T	RT	150
											T	200

P	PIPE TO PIPE	T	EQUAL T	RT	EQUAL T WITH REDUCER	W	WELDOLET	S	SOCKOLET

NOTES

Note 1: All the components of these especification shall be according to customer properties

Note 2: The valve materials could be different depending on the supplier, but the minimum quality of these materials are at least the indicated in these specification.

SARTECH Engineering, S.L. - C.I.F. (ES) B20927521

5. D16H

ARVAND KAVEH STEEL COMPLEX

Material:	Carbon Steel; OD PIPES: P235+N / 1.0308 DN PIPES: P235TR1 / 1.0254 / A106	**Specification number:**	D16H
Design Limits:	Temperature: -10 ... +80 °C	**Design code:**	EN 13480
	Pressure: 16 bar (1.6 MPa)	**Pressure Rating:**	PN 16
	Corrosion allowance: 0.5 mm	**Diameter range:**	OD8- OD42 / DN32 - DN150
Type of fluid:	Hydraulic fluids return (HT), Hydrualic fluids drain (HD)		

PIPING

DIMENSIONS/TYPE	DIN EN 10305-4 (DIN 2445)/ SEAMLESS PIPES - THD (BSP)								DIN EN 10216-3 (DIN 2448/1630) / SEAMLESS PIPES- BE							
MATERIAL	P235+N / ST37.4								P235TR1 / 1.0254 / A106							
Nominal Diameter	**OD 8**	**OD 10**	**OD 12**	***OD 18***	***OD 22***	***OD 28***	***OD 35***	***OD 42***	**DN 32**	***DN 40***	***DN 50***	***DN 65***	***DN 80***	***DN 100***	**DN 125**	**DN 150**
Outside Diameter	8	10	12	*18*	*22*	*28*	*35*	*42*	42.4	*48.3*	*60.3*	*76.1*	*88.9*	*114.3*	139.7	168.3
Wall Thickness	1.5	1.5	2	*2*	*2*	*2.5*	*3*	*4*	2.6	*2.6*	2.9	*2.9*	*3.2*	3.6	4	4.5
Weight (kg/m)	0.24	0.31	0.49	*0.79*	*0.99*	*1.57*	*2.37*	*3.06*	2.57	*3.64*	*5.19*	5.28	*6.81*	*9.90*	13.5	18.1

FITTINGS

TYPE		SIZE	END	STANDARD/DIMENSIONS	MATERIAL	NOTE
Elbow / Bend 90º (3D SR; 5D LR)		OD 8-OD 42	THD (BSP)	DIN EN ISO 8434-1	P235+N / 1.0308 (SEAMLESS)	
		DN 32-DN 50	SW	ASME B16.11, 3000#	A105	
		DN 65-DN 150	BW	DIN EN 10253-1 (EX. Din 2605/2606-1)	P235TR1 / 1.0254 / A106 (SEAMLESS)	
Elbow / Bend 45º (3D SR; 5D LR)		OD 8-OD 42	THD (BSP)	DIN EN ISO 8434-1	P235+N / 1.0308 (SEAMLESS)	
		DN 32-DN 50	SW	ASME B16.11, 3000#	A105	
		DN 65-DN 150	BW	DIN EN 10253-1 (EX. Din 2605/2606-1)	P235TR1 / 1.0254 / A106 (SEAMLESS)	
Reducer, conc./ecc.		OD 8-OD 42	THD (BSP)	DIN EN ISO 8434-1	P235+N / 1.0308 (SEAMLESS)	
		DN 32-DN 50	SW	ASME B16.11, 3000#	A105	
		DN 65-DN 150	BW	DIN EN 10253-1 (EX. Din 2616)	P235TR1 / 1.0254 / A106 (SEAMLESS)	
T equal/reducing		OD 8-OD 42	THD (BSP)	DIN EN ISO 8434-1	P235+N / 1.0308 (SEAMLESS)	
		DN 32-DN 50	SW	ASME B16.11, 3000#	A105	
		DN 65-DN 150	BW	DIN EN 10253-1 (EX. DIN 2615)	P235TR1 / 1.0254 / A106 (SEAMLESS)	
Cap		OD 8-OD 42	THD (BSP)	DIN EN ISO 8434-1	P235+N / 1.0308 (SEAMLESS)	
		DN 32-DN 50	SW	ASME B16.11, 3000#	A105	
		DN 65-DN 150	BW	DIN EN 10253-1 (EX. DIN 2617)	P235TR1 / 1.0254 / A106 (SEAMLESS)	
Plug		OD 8-OD 42	THD (BSP)	DIN EN 10242	EN-GJMW-400-5	Malleable cast iron fittings, (galvanised ISO 49)
Union (Connectors, Straight)	**Cutting ring**	OD 8-OD 42	THD (BSP)	DIN EN ISO 8434-1	STEEL (ACCORDING TO DIN 3859, HOP DIG GALVANIZED)	
	Cone	OD 8-OD 42	THD (BSP)	DIN EN ISO 8434-4	STEEL (ACCORDING TO DIN 3859)	
Union (sockolet, weldolet, etc)		DN 32-DN 150	BW	DIN EN 10242 (ALTERN. B: ASME B16.11 3000#)	EN-GJMW-400-5 (ALTERN. B: A 105)	Malleable cast iron fittings, (galvanised ISO 49)

FLANGES, GASKETS AND BOLTING

TYPE	SIZE	END	STANDARD/DIMENSIONS	MATERIAL	NOTE
WN-Flange	OD 8-OD 42	THD (BSP)	DIN EN 1092-1	S335J2 / 1.0577	RAISED FACE TYPE B1 (RF)
	DN 32-DN 150	BW	DIN EN 1092-1	S235JR+N / 1.0038	RAISED FACE TYPE B1 (RF)
Slip-on Flange	OD 8-OD 42	THD (BSP)	DIN EN 1092-1	S335J2 / 1.0577	FLAT FACE TYPE (RF)
	DN 32-DN 150	BW	DIN EN 1092-1	S235JR+N / 1.0038	FLAT FACE TYPE (RF)
Sockolet-Flange	DN 32-DN 50	SW	150# ASME B16.5 BORE TO MATCH PIPE	S335J2 / 1.0577	RAISED FACE TYPE B1 (RF)
Blind Flange	DN 32-DN 150	-	DIN EN 1092-1	S235JR+N / 1.0038	RAISED FACE TYPE B1 (RF)
SAE Flange	OD 25-DN 150	BW	DIN EN ISO 6162-1/2	S335J2 / 1.0577	WELD ON RATING 3000 PSI
Gasket	DN 32-DN 50		ASME B16.20	Compression fibre with bonding agent. Flat Gasket, 2mm thick. (e.g. KlingerSil C-4400)	
	DN 65-DN 150	-	DIN EN 1514-1		
O-Ring	OD 8-OD 42	-	-	VITON (FKM)	
Screw	DN 40-DN 150	-	DIN EN ISO 4014/4017	8.8 galvanised	Hexagon head screw (ex DIN 931/933)
Hex. socket screw	OD 8-DN 150	-	DIN EN ISO 4762	8.8 galvanised	Hexagon socket head screw (ex DIN 912)
Stud Bolt	DN 40-DN 150	-	DIN EN ISO 4753	8.8 galvanised	Stud bolt with metric thread (DIN 976-1, type B)
Nut	OD 8-DN 150	-	DIN EN ISO 4032	8.8 galvanised	Hexagon nut (ex DIN 934)
Flat washer	DN 15-DN 600	-	DIN EN ISO 7089	8.8 galvanised	

PIPE NIPPLES

TYPE	SIZE	TYPE OF CONNECTION	DESCRIPTION	NOTE
Drains and Vents	DN 20	PIPE TO PIPE	Pipe Nipple TOE L=100mm	
Pressure measurement	DN 15	PIPE TO PIPE	Sockolet, Pipe Nipple L=150mm THD (DIN 2999/PE), Ball valve THD (DIN 2999)	
Temperature measurement	DN 25	THD (Thredolet)	Threadolet THD (to be used depending on installation	

EXTRA

TYPE	SIZE	STANDARD/DIMENSIONS	MATERIAL	NOTE
Pipe fastening	DN 15-DN 25	DIN 3015-2	PP (AL in hot areas)	Pipe clamps (Stauff) heavy duty + single weld plate
	DN 15-DN 500	DIN 3570	Steel, galvanised	Round steel U-bolt clamps TYPE A
Flex. Hoses	DN 20-DN 32	According to HOSE DATA SHEETS (type of conections, material, length)		Refer to separate document

VALVES

TYPE	ENDS	SIZE	MATERIAL	NOTE
BALL VALVE	THD (BSP)	OD 8-OD 42	CS to ASTM A105 + PTFE	D16HBA01
	FLANGED (ACCORDING TO SPECIFICATION)	DN 32-DN 150	CS to ASTM A216 Gr. WCB	D16HBA02
CHECK VALVE	FLANGED (ACCORDING TO SPECIFICATION)	DN 40-DN 100	BRONZE + Austenitic stainless steel.	D16HCK01

BRANCH CONSTRUCTION

First option:

HEADER								
32	40	50	65	80	100	125	150	
T	RT	RT	RT	S	S	S	S	32
	T	RT	RT	RT	S	S	S	40
		T	RT	RT	RT	RT	RT	50
			T	RT	RT	RT	RT	65
				T	RT	RT	RT	80
					T	RT	RT	100
						T	RT	125
							T	150

BRANCH

P	PIPE TO PIPE	T	EQUAL T	RT	REDUCING T	W	WELDOLET	S	SOCKOLET

NOTES

Note 1: The material for hydraulic pipes/fittings/conections/flanges/etc could be change if the suministrator of the hydraulic equipments shall indicate in their engineering.

Note 2: All the components of this especification shall be according to customer properties

Note 3: The valve materials could be different depending on the supplier, but the minimum quality of these materials are at least the indicated in these specification.

SARTECH Engineering, S.L. - C.I.F. (ES) B20927521

6. D250H

AENOR ER Empresa Registrada ER-0529/1999 · IQNet · Sartech ENGINEERING

ARVAND KAVEH STEEL COMPLEX

Material:	Carbon Steel; OD PIPES: E235+N / 1.0308 DN PIPES: P355N / 1.0562	**Specification number:**	D250H
Design Limits:	Temperature: -10 ... +80 °C	**Design code:**	EN 13480
	Pressure: 160 bar (16 MPa)	**Pressure Rating:**	PN 160
	Corrosion allowance: 0.5 mm	**Diameter range:**	OD8- OD38 / DN32 - DN100
Type of fluid:	Hydraulic fluids return (HT), Hydraulic fluids for pressure line (HP), Hydrualic fluids drain (HD)		

PIPING

DIMENSIONS/TYPE	DIN EN 10305-4 (DIN 2445)/ SEAMLESS PIPES - THD (BSP)								DIN EN 10216-3 (DIN 2448/1630)/ SEAMLESS PIPES - BE						
Material:	P235+N / ST37.4								P355N / 1.0562						
Nominal Diameter	**OD 8**	**OD 10**	**OD 12**	***OD 16***	***OD 20***	***OD 25***	***OD 30***	***OD 38***	**DN 15**	**DN 20**	**DN 25**	**DN 32**	**DN 40**	**DN 50**	**DN 65**
Outside Diameter	8	10	12	16	*20*	*25*	*30*	*38*	*21.3*	*26.9*	*33.7*	*42.4*	*48.3*	*60.3*	*76.1*
Wall Thickness	1.5	2	2	2.5	*2.5*	*3*	*4*	*5*	*2.9*	*2.9*	*3.2*	*3.6*	*4*	*5.6*	*6.3*
Weight (kg/m)	0.24	0.31	0.49	0.83	*1.11*	*1.85*	*2.59*	*4.07*	*1.3*	*1.73*	*2.42*	*3.47*	*4.41*	*7.53*	*10.9*

FITTINGS

TYPE	SIZE	END	STANDARD/DIMENSIONS	MATERIAL	NOTE
Elbow / Bend 90º (3D SR; 5D LR)	OD 8-OD 42	THD (BSP)	DIN EN ISO 8434-1	STEEL (SEAMLESS ACCORDING TO DIN 3859, HOP DIG GALVANIZED)	
	DN 32-DN 50	SW	ASME B16.11, 6000#	A105	
	DN 65-DN 100	BW	DIN EN 10253-1 (EX. Din 2605/2606-1)	P355N / 1.0562 (SEAMLESS)	
Elbow / Bend 45º (3D SR; 5D LR)	OD 8-OD 42	THD (BSP)	DIN EN ISO 8434-1	STEEL (SEAMLESS ACCORDING TO DIN 3859, HOP DIG GALVANIZED)	
	DN 32-DN 50	SW	ASME B16.11, 6000#	A105	
	DN 65-DN 100	BW	DIN EN 10253-1 (EX. Din 2605/2606-1)	P355N / 1.0562 (SEAMLESS)	
Reducer, conc./ecc.	OD 8-OD 42	THD (BSP)	DIN EN ISO 8434-1	STEEL (SEAMLESS ACCORDING TO DIN 3859, HOP DIG GALVANIZED)	
	DN 32-DN 50	SW	ASME B16.11, 6000#	A105	
	DN 65-DN 100	BW	DIN EN 10253-1 (EX. Din 2616)	P355N / 1.0562 (SEAMLESS)	
T equal/reducing	OD 8-OD 42	THD (BSP)	DIN EN ISO 8434-1	STEEL (SEAMLESS ACCORDING TO DIN 3859, HOP DIG GALVANIZED)	
	DN 32-DN 50	SW	ASME B16.11, 6000#	A105	
	DN 65-DN 100	BW	DIN EN 10253-1 (EX. DIN 2615)	P355N / 1.0562 (SEAMLESS)	
Cap	OD 8-OD 42	THD (BSP)	DIN EN ISO 8434-1	STEEL (SEAMLESS ACCORDING TO DIN 3859, HOP DIG GALVANIZED)	
	DN 32-DN 50	SW	ASME B16.11, 6000#	A105	
	DN 65-DN 100	BW	DIN EN 10253-1 (EX. DIN 2617)	P355N / 1.0562 (SEAMLESS)	
Plug	OD 8-OD 42	THD (BSP)	DIN EN ISO 8434-1	STEEL (ACCORDING TO DIN 3859, HOP DIG GALVANIZED)	
Union (Connectors, Straight) **Cutting ring**	OD 8-OD 42	THD (BSP)	DIN EN ISO 8434-1	STEEL (ACCORDING TO DIN 3859, HOP DIG GALVANIZED)	
Union (Connectors, Straight) **Cone**	OD 8-OD 42	THD (BSP)	DIN EN ISO 8434-4	STEEL (ACCORDING TO DIN 3859, HOP DIG GALVANIZED)	
Union (sockolet, weldolet, etc)	DN 32-DN 100	BW	DIN EN 10242 (ALTERN. B: ASME B16.11 6000#)	EN-GJMW-400-5 (ALTERN. B: A 105)	Malleable cast iron fittings, (galvanised ISO 49)

FLANGES, GASKETS AND BOLTING

TYPE	SIZE	END	STANDARD/DIMENSIONS	MATERIAL	NOTE
WN-Flange	OD 8-OD 42	THD (BSP)	DIN EN 1092-1	S335J2 / 1.0577	RAISED FACE TYPE B1 (RF)
	DN 65-DN 150	BW	DIN EN 1092-1	S335J2 / 1.0577	RAISED FACE TYPE B1 (RF)
Slip-on Flange	OD 8-OD 42	THD (BSP)	DIN EN 1092-1	S335J2 / 1.0577	FLAT FACE TYPE (RF)
	DN 32-DN 50	SW	DIN EN 1092-1	S335J2 / 1.0577	FLAT FACE TYPE (RF)
	DN 65-DN 150	BW	DIN EN 1092-1	S335J2 / 1.0577	FLAT FACE TYPE (RF)
Sockolet-Flange	DN 32-DN 50	SW	1500# ASME B16.5 BORE TO MATCH PIPE	S335J2 / 1.0577	RAISED FACE TYPE B1 (RF)
Blind Flange	DN 32-DN 50	-	1500# ASME B16.5 BORE TO MATCH PIPE	S355J2+N / 1.0038	RAISED FACE TYPE B1 (RF)
	DN 65-DN 150	-	DIN EN 1092-1	S355J2+N / 1.0038	RAISED FACE TYPE B1 (RF)
SAE Flange	OD 25-DN 150	BW	DIN EN ISO 6162-1/2	S335J2 / 1.0577	WELD ON RATING 6000 PSI
Gasket	DN 32-DN 50		ASME B16.20	Compression fibre with bonding agent. Flat Gasket, 2mm thick. (e.g. KlingerSil C-4400)	
	DN 65-DN 150	-	DIN EN 1514-1		
O-Ring	OD 8-OD 42	-	-	VITON (FKM)	
Screw	DN 40-DN 150	-	DIN EN ISO 4014/4017	8.8 galvanised	Hexagon head screw (ex DIN 931/933)
Hex. socket screw	OD 8-DN 150	-	DIN EN ISO 4762	8.8 galvanised	Hexagon socket head screw (ex DIN 912)
Stud Bolt	DN 40-DN 150	-	DIN EN ISO 4753	8.8 galvanised	Stud bolt with metric thread (DIN 976-1, type B)
Nut	OD 8-DN 150	-	DIN EN ISO 4032	8.8 galvanised	Hexagon nut (ex DIN 934)
Flat washer	OD 8-DN 150	-	DIN EN ISO 7089	8.8 galvanised	

PIPE NIPPLES

TYPE	SIZE	TYPE OF CONNECTION	DESCRIPTION	NOTE
Drains and Vents	DN 20	PIPE TO PIPE	Pipe Nipple TOE L=100mm	
Pressure measurement	DN 15	PIPE TO PIPE	Sockolet, Pipe Nipple L=150mm THD (DIN 2999/PE), Ball valve THD (DIN 2999)	
Temperature measurement	DN 25	THD (Thredolet)	Threadolet THD (to be used depending on installation	

EXTRA

TYPE	SIZE	STANDARD/DIMENSIONS	MATERIAL	NOTE
Pipe fastening	DN 15-DN 25	DIN 3015-2	PP (AL in hot areas)	Pipe clamps (Stauff) heavy duty + single weld plate
	DN 15-DN 500	DIN 3570	Steel, galvanised	Round steel U-bolt clamps TYPE A
Flex. Hoses	DN 20-DN 32	According to HOSE DATA SHEETS (type of conections, material, length)		Refer to separate document

VALVES

TYPE	ENDS	SIZE	MATERIAL	NOTE
BALL VALVE	THD (BSP)	OD 8-OD 38	C22 / 1.0402	D250HBA01
	FLANGED (ACCORDING TO SPECIFICATION)	DN 32-DN 100	C22 / 1.0402	D250HBA02
CHECK VALVE	THD (BSP)	OD 8-OD 38	C22 / 1.0402	D250HCK01
	FLANGED (ACCORDING TO SPECIFICATION)	DN 32-DN 100	C22 / 1.0402	D250HCK02

BRANCH CONSTRUCTION

First option:

HEADER							
32	40	50	65	80	100	125	
T	RT	RT	RT	S	S	S	32
	T	RT	RT	RT	S	S	40
		T	RT	RT	RT	RT	50
			T	RT	RT	RT	65
				T	RT	RT	80
					T	RT	100
						T	125
							150

BRANCH

P	PIPE TO PIPE	T	EQUAL T	RT	REDUCING T	W	WELDOLET	S	SOCKOLET

NOTES	
	Note 1: The material for hydraulic pipes/fittings/conections/flanges/etc could be change if the suministrator of the hydraulic equipments shall indicate in their engineering.
	Note 2: All the components of this especification shall be according to customer properties
	Note 3: The valve materials could be different depending on the supplier, but the minimum quality of these materials are at least the indicated in these specification.

SARTECH Engineering, S.L. - C.I.F. (ES) B20927521

7. L16A

ARVAND KAVEH STEEL COMPLEX

Material:	High density polyethylene (HDPE) PE 100	**Specification number:**	L16A
Design Limits:	Temperature: -10 ... +80 °C	**Design code:**	EN 12201
	Pressure: 16 bar (1.6 MPa)	**Pressure Rating:**	PN 16
	Corrosion allowance: 0.0 mm	**Diameter range:**	DN20 - DN 180
Type of fluid:	Fire fighting water (FW; UNDERGROUND), Potable water (PW; UNDERGROUND)		

PIPING

DIMENSIONS/TYPE	EN 12201																					
MATERIAL	HDPE; PE 100 (SDR 11)																					
Nominal Diameter	**DN 20**	**DN 25**	***DN 32***	***DN 40***	***DN 50***	***DN 63***	***DN 75***	***DN 90***	***DN 110***	***DN 125***	***DN 140***	***DN 160***	***DN 180***									
Outside Diameter	20	25	32	*40*	*50*	*63*	*75*	*90*	*110*	*125*	*140*	*160*	*180*									
Wall Thickness	2	2.3	3	*3.7*	*4.6*	*5.8*	*6.8*	*8.2*	*10.0*	*11.4*	*12.7*	*14.6*	*16.4*									
Weight (kg/m)	0.11	0.17	0.27	*0.43*	*0.67*	*1.05*	*1.47*	*2.12*	*3.16*	*4.1*	*5.12*	*6.72*	*8.49*									

FITTINGS

TYPE	SIZE	END	STANDARD/DIMENSIONS	MATERIAL	NOTE
Elbow / Bend 90º (3D SR; 5D LR)	DN 20-DN180	Thermofusion	EN 12201	HDPE PE 100 PN 16 SRD 11	
Elbow / Bend 45º (3D SR; 5D LR)	DN 20-DN180	Thermofusion	EN 12201	HDPE PE 100 PN 16 SRD 11	
Reducer, conc./ecc.	DN 20-DN180	Thermofusion	EN 12201	HDPE PE 100 PN 16 SRD 11	
T equal/reducing	DN 20-DN180	Thermofusion	EN 12201	HDPE PE 100 PN 16 SRD 11	
Cap	DN 20-DN180	Thermofusion	EN 12201	HDPE PE 100 PN 16 SRD 11	
Couplings	DN 20-DN180	Thermofusion	EN 12201	HDPE PE 100 PN 16 SRD 11	
Union (sockolet, weldolet, etc)	DN 20-DN180	Thermofusion	EN 12201	HDPE PE 100 PN 16 SRD 11	

FLANGES, GASKETS AND BOLTING

TYPE	SIZE	END	STANDARD/DIMENSIONS	MATERIAL	NOTE
WN-Flange	DN 20-DN180	Thermofusion	EN 12201/DIN EN 1092-1	HDPE PE 100 PN 16 SRD 11	RAISED FACE TYPE B1 (RF)
SOCKET-Flange	DN 20-DN180	Thermofusion	EN 12201/DIN EN 1092-1	HDPE PE 100 PN 16 SRD 11	RAISED FACE TYPE B1 (RF)
Blind Flange	DN 20-DN180	Thermofusion	EN 12201/DIN EN 1092-1	HDPE PE 100 PN 16 SRD 11	TYPE A
Gasket	DN 20-DN180	-	DIN EN 1514-1	Compression fibre with bonding agent (Viton (FKM), y Perbunan (NBR)). Flat Gasket, 2mm thick. (e.g. KlingerSil C-4400)	
Screw	DN 20-DN180	-	DIN EN ISO 4014/4017	8.8 galvanised	Hexagon head screw (ex DIN 931/933)
Hex. socket screw	DN 20-DN180	-	DIN EN ISO 4762	8.8 galvanised	Hexagon socket head screw (ex DIN 912)
Stud Bolt	DN 20-DN180	-	DIN EN ISO 4753	8.8 galvanised	Stud bolt with metric thread (DIN 976-1, type B)
Nut	DN 20-DN180	-	DIN EN ISO 4032	8.8 galvanised	Hexagon nut (ex DIN 934)

PIPE NIPPLES

TYPE	SIZE	TYPE OF CONNECTION	DESCRIPTION	NOTE
Drains and Vents	DN 50	S (Sockolet)	Pipe Nipple TOE L=100mm	
Pressure measurement	DN 50	S (Sockolet)	Pipe Nipple TOE L=100mm	
Temperature measurement	DN 50	THD (Thredolet)	Threadolet or Elbowlet THD to be used depending on installation	

VALVES

TYPE	ENDS	SIZE	MATERIAL	NOTE
BALL VALVE	FLANGED (ACCORDING TO SPECIFICATION)	DN 20-DN180	CS to ASTM A216 Gr. WCB	L16ABA01
GATE VALVE	FLANGED (ACCORDING TO SPECIFICATION)	DN 20-DN180	CS to ASTM A216 Gr. WCB	L16AGA01
GLOBE VALVE	FLANGED (ACCORDING TO SPECIFICATION)	DN 20-DN180	CS to ASTM A216 Gr. WCB	L16AGL01
BUTTERFLY VALVE	FLANGED (ACCORDING TO SPECIFICATION)	DN 20-DN180	CS to ASTM A216 Gr. WCB	L16ABF01
CHECK VALVE	FLANGED (ACCORDING TO SPECIFICATION)	DN 20-DN180	CS to ASTM A216 Gr. WCB	L16ACK01

BRANCH CONSTRUCTION

First option: DIN Elements

HEADER													
20	25	32	40	50	63	75	90	110	125	140	160	180	
T	T+R	T+R	T+R	T+R	T+R	P	P	P	P	P	P	P	20
	T	T+R	T+R	T+R	T+R	P	P	P	P	P	P	P	25
		T	T+R	T+R	T+R	P	P	P	P	P	P	P	32
			T	T+R	T+R	T+R	P	P	P	P	P	P	40
				T	T+R	T+R	T+R	P	P	P	P	P	50
					T	T+R	T+R	T+R	P	P	P	P	63
						T	T+R	T+R	T+R	P	P	P	75
							T	T+R	T+R	T+R	P	P	90
								T	T+R	T+R	T+R	P	110
									T	T+R	T+R	T+R	125
										T	T+R	T+R	140
											T	T+R	160
												T	180

BRANCH

P	PIPE TO PIPE	T	EQUAL T	T+R	EQUAL T WITH REDUCER	W	WELDOLET	S	SOCKOLET

NOTES

Note 1: All the components of these especification shall be according to customer properties

Note 2: The valve materials could be different depending on the supplier, but the minimum quality of these materials are at least the indicated in these specification.

PIPING SPECIFICATION

ARVAND KAVEH STEEL COMPLEX

HOT ROLLING MILL PLANT

SARTECH Engineering S.L. - C.I.F. (F.S.) B20927521

Document Number:

85-09-80-U-SP-001-B

Revision History

Rev	Revision Date	Created by	Checked by	Approved by	Description
00	09/01/2015	E.D.C.	J.G.	J.G.	Initial edition
01	16-03-2015	E.D.C.	J.G.	J.G.	Second edition
02	18-09-2015	D.B.	I.G.	J.G.	New revision

AENOR ER Empresa Registrada IQNet

Sartech ENGINEERING

INDEX

Content Page

1. INTRODUCTION ____ 3
2. SCOPE ____ 5
3. APPLICABLE CODES & STANDARDS ____ 7
4. PIPE MEDIA ALLOCATION ____ 9
5. PIPING BRANCHES ____ 12
6. MEDIA VELOCITIES ____ 14
7. PIPE CLASSES ____ 16
8. VALVES ____ 18

SARTECH Engineering S.L. - C.I.F. (ES) B20927521

AENOR ER Empresa Registrada IQNet

Sartech ENGINEERING

SARTECH Engineering S.L. - C.I.F. (F.S.) B20927521

1. INTRODUCTION

This standard specifies all currently valid pipe classes for all the systems and its associated equipment supplied by SARTECH.

The design of the piping in this specification is based on economic design and types of pipes which are commercially easily available.

If for any reason the specified material (i.e. wall thickness) is not followed, it is acceptable to choose a wall thickness higher than specified. For a wall thickness smaller than specified in the respective pipe class, it is in the responsibility of the Design Company or engineer to proof by calculation that the chosen wall thickness is sufficient for the max. Allowable system pressure.

This specification will not apply to on board piping.

SARTECH Engineering S.L. - C.I.F. (F.S.) B20927521

AENOR ER Empresa Registrada IQNet

Sartech ENGINEERING

SARTECH Engineering S.L. - C.I.F. (F.S.) B20927521

2. SCOPE

The definition of the following elements of interconnecting piping is considered-included in de scope of this document:

- Piping.
- Accessories: Tees, elbows, reductions, branches, etc.
- Valves.
- Flanges.
- Nuts and studs / bolts.
- Gaskets.

SARTECH Engineering S.L. - C.I.F. (F.S.) B20927521

AENOR Empresa Registrada IQNet
Sartech ENGINEERING

SARTECH Engineering S.L. - C.I.F. (F.S.) B20927521

3. APPLICABLE CODES & STANDARDS

REFERENCE CODES:

DIN:

- DIN EN 10220 ..... Seamless / welded pipes. Dimensions and weights.
- DIN EN 10255 ..... Non-alloy pipes for welding/threading.
- DIN EN 10296-1 ..... Welded pipes for general/Mechanical engineering.
- DIN EN 10296-2 ..... Stainless steel pipes for general/Mechanical engineering
- DIN EN 10216-1 ..... Seamless (ex DIN 2488 / 1626)
- DIN EN 10216-5 ..... Seamless (ex DIN 2462 / 17458)
- DIN EN 10217-1 ..... Longitudinal welded / Spiral welded (ex DIN 2458/1626)
- DIN EN 10217-7 ..... Longitudinal welded (ex DIN 2463/17457)
- DIN EN 10242 ..... Malleable cast iron fittings, (galvanized ISO 49)
- DIN EN 10241 ..... Threaded steel pipe fittings (ex DIN 2980) / screwed (R-thread) or weld end.
- DIN EN 10253-1 / -2 ..... Elbow, seamless or welded (Ex DIN 2605-1)
- DIN EN 10253-3 ..... Elbow, seamless or welded (Ex DIN 2605-1)
- DIN EN 1092-1 / 5 ..... Flanges and their joints
- DIN EN 10305-4 ..... Carbon Steel Cold drawn precision pipes
- DIN EN 1514-1 ..... Dimensions of gaskets for PN-designated flanges.
- DIN EN 3015-2 ..... Pipe clamps (stauff) heavy duty + single welded plate
- DIN EN 3570 ..... Round steel U-bolt clamps TYPE A.
- DIN EN ISO 1127 ..... Stainless steel pipes. Dimensions and weights
- DIN EN ISO 4014/4017 ..... Hexagon head bolts / screws
- DIN EN ISO 4762 ..... Hexagon socket head cap screw
- DIN EN ISO 4753 ..... Fasteners - Ends of parts with external ISO metric thread
- DIN EN ISO 4032 ..... Hexagon regular nuts
- DIN EN ISO 8434-1 ..... Cutting ring fittings
- DIN EN ISO 8434-4 ..... Weld cone fitting
- DIN EN ISO 6162 ..... Connections for hydraulic fluid power and general use

SARTECH Engineering S.L. - C.I.F. (ES) B20927521

AENOR ER Empresa Registrada IQNet
Sartech ENGINEERING

SARTECH Engineering S.L. - C.I.F. (F.S.) B20927521

4. PIPE MEDIA ALLOCATION

The following table shows the different pipe classes that can be used for each fluid and its associated equipment supplied by SARTECH.

FLUID	CIRCUIT	PIPE CLASS	COMMENTS
Contact Water	KW Lines from the water treatment plant to the consumers	D16A/L16A	Over ground/Submerged
Non-Contact Water	CW Lines from the water treatment plant to the consumers	D16A/L16A	Over ground/Submerged
OTHER WATER	FW Firefighting water	D16A/L16A	Over ground/Underground
	EW Emergency water	D16A	
	PW Potable water	PVC/L16A	Over ground/Underground
Air	CA Compressed Air	D16A	Material of pipeline of instrument air to be Carbon steel
Air	IA Instrumentation air	G16A	Material of pipeline of instrument air to be Galvanised steel
Oxygen	OX	S16A	Stainless
Natural gas	NG	D16B	
Diesel	DI	D16A	

SARTECH Engineering S.L. - C.I.F. (ES) B20927521

AENOR Empresa Registrada IQNet
Sartech ENGINEERING

Oil	HP Hydraulic fluids (pressure lines)	D250H/S250H	Stainless only on request
	HT/HD Hydraulic fluids (return and drain)	D16H/S16H	Stainless only on request
	LO Air-Oil lubrication	D16A	
Grease	GR Bearings, lubrication, etc.	D350H/S350H	Stainless only on request

Instrumentation will be accordingly dimensioned to the equipment working pressure.

SARTECH Engineering S.L. - C.I.F. (F.S.) B20927521

AENOR ER Empresa Registrada IQNet
Sartech ENGINEERING

SARTECH Engineering S.L. - C.I.F. (F.S.) B20927521

5. PIPING BRANCHES

- See..... 00001ESP70001 Annex 1 - Piping system material

This information of the piping branches is included the “Annex 1 Piping system material”, because the type of branches depends on the pipe specification.

SARTECH Engineering S.L. - C.I.F. (ES) B20927521

AENOR ER Empresa Registrada IQNet

Sartech ENGINEERING

SARTECH Engineering S.L. - C.I.F. (F.S.) B20927521

6. MEDIA VELOCITIES

The media velocities considered for pipe designing and sizing come from a combination of requirements of the equipment to be supplied as well as the physical interaction between the fluid and the pipes. These are the different velocities considered for the designs:

- WATER (GENERAL): 1.5-2m/s
- OXYGEN – NITROGEN – ARGON: ≤15m/s
- NATURAL GAS: ≤15m/s
- COMPRESSED AIR: ≤10m/s
- HIDRAULIC PRESSURE: 4 – 5m/s
- HIDRAULIC RETURN: 3 m/s
- HIDRAULIC SUCTION: 0.5 –1.2 m/s
- LUBE OIL: 3 m/s

The velocities above mentioned are a general criteria applied for the entire Project. Internally, some equipment might need different design criteria, which will be carried out due to specific individual requirements.

SARTECH Engineering S.L. - C.I.F. (ES) B20927521

AENOR ER Empresa Registrada IQNet

Sartech ENGINEERING

SARTECH Engineering S.L. - C.I.F. (F.S.) B20927521

7. PIPE CLASSES

- See..... 00001ESP70001 Annex 1 - Piping system material

All available pipe classes are shown with their main characteristics (for example: materials, available diameters, fittings, etc).

All the elements that appear in the specification are according to the actual normative and also under the design code of SARTECH.

SARTECH Engineering S.L. - C.I.F. (ES) B20927521

AENOR Empresa Registrada ER CERTIFIED IQNet

Sartech ENGINEERING

SARTECH Engineering S.L. - C.I.F. (F.S.) B20927521

8. VALVES

- See..... 00001ESP70001 Annex 1 - Piping system material

This general information is the connections type, the size, the valve body material and the tag of the valve specification. This valve specification depends on the pipe specification, because the material is similar between the pipe and the valve.

In the valve document will appear other information such as the design code, the material of the internal pieces and other characteristics such as for example the characteristics of different actuators which we shall use in the installation among others.

Other elements such as strainers or water traps will have specifically data sheets with the operation conditions, because these elements do not have general characteristics.

SARTECH Engineering S.L. - C.I.F. (ES) B20927521

AENOR Empresa Registrada IQNet

Sartech ENGINEERING